| REVISION HISTORY DF: | | | |
|---|---|---|---|
| REV | DESCRIPTION OF CHANGE | BY | REV DATE |
| 01 | Initial Release | SC | 2020/04/23 |

FHD554-X(135-046101-01)

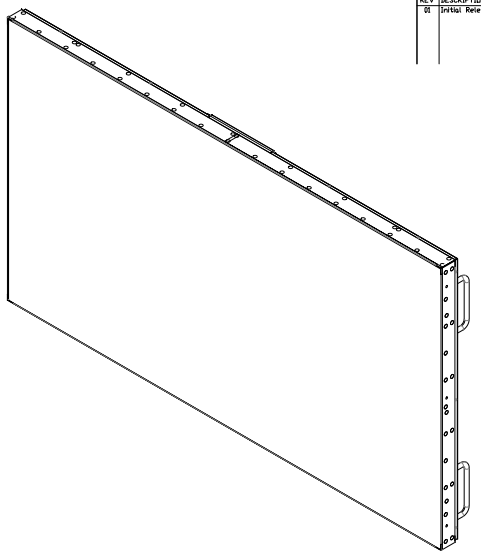

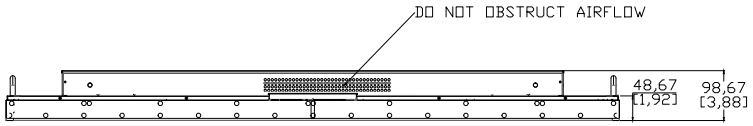


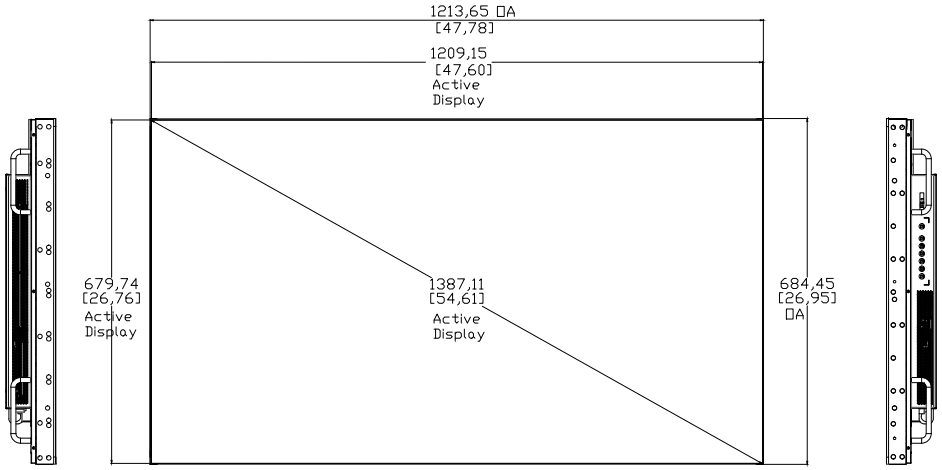


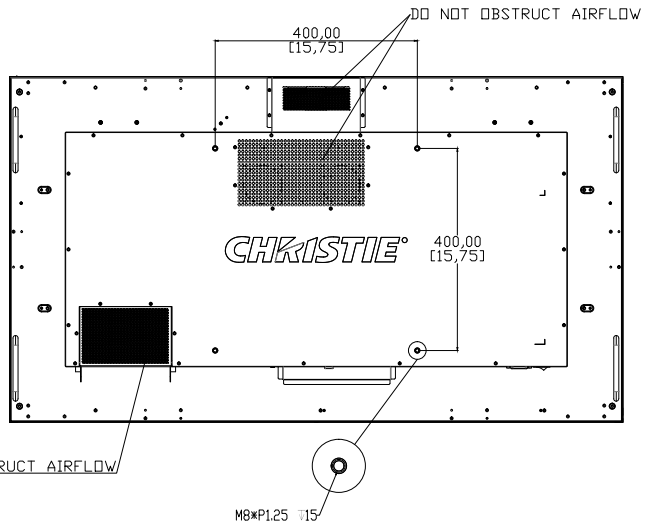


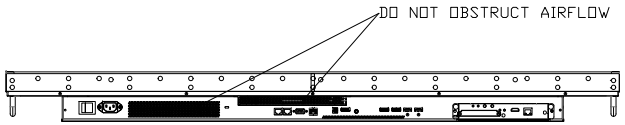


GENERAL NOTES:

MASS: 38.5±1kg (84.9±2.2lbs)
OPERATING TEMPERRATURE:0-40°C (32-104°F)MAX
MAX. POWER REQUIREMENTS: 200W
TYPICAL. POWER CONSUMPTION: 145W
STANDBY POWER CONSUMPTION: 0.5W
PAINT: Kuopant 780-45552H
Finish: Satin

| | | | |
|---|---|---|---|
| UNITS INCHES ☐ MILLIMETRE ☒ UNLESS OTHERWISE SPECIFIED INTERPRET DIMENSIONS AND TOLERANCES PER ASME Y14.5M-1994 | DRAWN BY: SC | CHRISTIE | CHRISTIE DIGITAL SYSTEMS USA, INC. CHRISTIE DIGITAL SYSTEMS CANADA, INC. |
| | DRAWN DATE: 2020/04/23 | | |
| | APPROVED BY: Devin | | |
| | APPROVAL DATE: 2020/04/23 | | |
| TOLERANCES APPLY AS SHOWN BELOW | PROPRIETARY NOT TO BE REPRODUCED OR DISTRIBUTED IN ANY MANNER WITHOUT THE EXPRESS WRITTEN PERMISSION OF CHRISTIE | PART DESCRIPTION: DWG LINE FHD554-X | |
| DECIMAL PLACES: XXX ± .063 ± 1.6; XX ± .125 ± 3.1; X ± .250 ± 6.3 | | | |
| ANGULAR DIMENSIONS: XX° ±1.0°; XX.X° ±0.5° | THIRD ANGLE PROJECTION | SIZE: E; PART NUMBER: 020-001918-01; REVISION: 01 | |
| | | SCALE: 1:1; WEIGHT: LBS (KG); SHEET 1 OF 2 | |

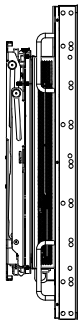

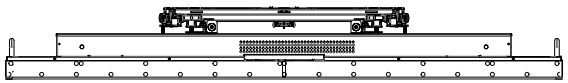

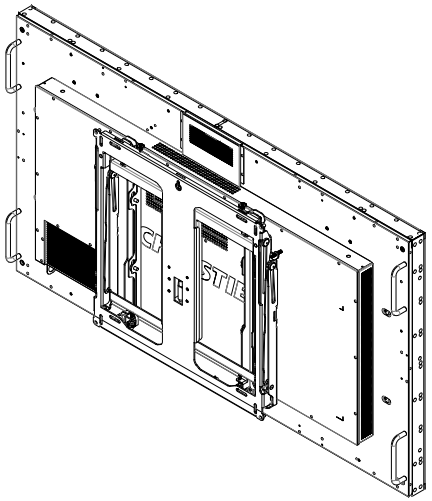

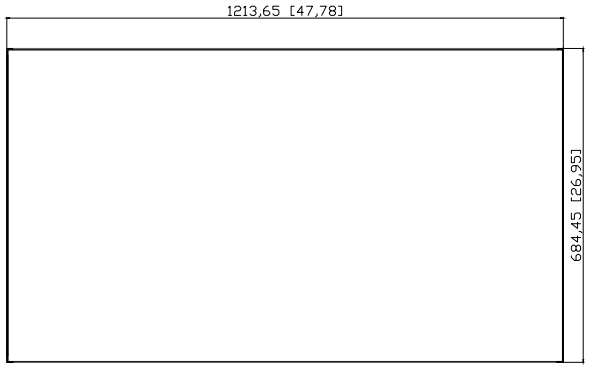


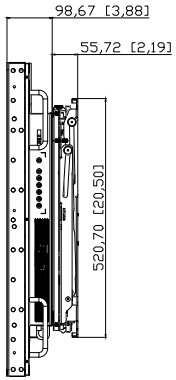


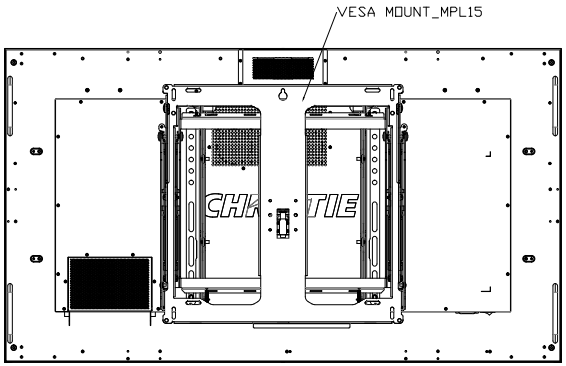


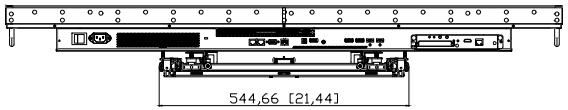


PROPRIETARY
NOT TO BE REPLICATED OR REFERENCED IN ANY MANNER WITHOUT THE EXPRESS WRITTEN PERMISSION OF CHRISTIE

CHRISTIE
CHRISTIE DIGITAL SYSTEMS USA, INC.
CHRISTIE DIGITAL SYSTEMS CANADA, INC.

| SIZE | PART NUMBER | REVISION |
|---|---|---|
| E | 020-001918-01 | 01 |

| SCALE | WEIGHT | SHEET |
|---|---|---|
| 14 | LBS ( KG) | SHEET 2 OF 2 |