Installation and Setup Guide

020-103314-25

Christie Griffyn® Series

CHRISTIE®

NOTICES

COPYRIGHT AND TRADEMARKS

Copyright © 2026 Christie Digital Systems USA Inc. All rights reserved.

All brand names and product names are trademarks, registered trademarks or trade names of their respective holders.

GENERAL

Every effort has been made to ensure accuracy, however in some cases changes in the products or availability could occur which may not be reflected in this document. Christie reserves the right to make changes to specifications at any time without notice. Performance specifications are typical, but may vary depending on conditions beyond Christie's control such as maintenance of the product in proper working conditions. Performance specifications are based on information available at the time of printing. Christie makes no warranty of any kind with regard to this material, including, but not limited to, implied warranties of fitness for a particular purpose. Christie will not be liable for errors contained herein or for incidental or consequential damages in connection with the performance or use of this material. Our centers of excellence for manufacturing in Kitchener, Ontario, Canada and in Shenzhen, China are ISO 9001:2015 Quality Management System-certified.

Christie is committed to making our documents free from language bias; however, we are not responsible for the language used on any linked or third-party documentation.

For the most current technical documentation and office contact information, visit *https://www.christiedigital.com/*.

Warranty

Products are warranted under Christie's standard limited warranty, the details of which are available at *https://www.christiedigital.com/help-center/warranties/* or by contacting your Christie dealer or Christie.

PREVENTATIVE MAINTENANCE

Preventative maintenance is an important part of the continued and proper operation of your product. Failure to perform maintenance as required, and in accordance with the maintenance schedule specified by Christie, voids the warranty. For preventative maintenance schedules, refer to *www.christiedigital.com*.

REGULATORY

The product has been tested and found to comply with the limits for a Class A digital device, pursuant to Part 15 of the FCC Rules. These limits are designed to provide reasonable protection against harmful interference when the product is operated in a commercial environment. The product generates, uses, and can radiate radio frequency energy and, if not installed and used in accordance with the instruction manual, may cause harmful interference to radio communications. Operation of the product in a residential area is likely to cause harmful interference in which case the user will be required to correct the interference at the user's own expense. Changes or modifications not expressly approved by the party responsible for compliance could void the user's authority to operate the equipment

CAN ICES-3 (A) / NMB-3 (A)

이 기기는 업무용(A급)으로 전자파적합등록을 한 기기이오니 판매자 또는 사용자는 이점을 주의하시기 바라며, 가정 외의 지역에서 사용하는 것을 목적으로 합니다.

ENVIRONMENTAL

The product is designed and manufactured with high-quality materials and components some of which can be recycled and reused. This symbol means electrical and electronic equipment, at their end-of-life, should be disposed of separately from regular waste. Please dispose of the product appropriately and according to local regulations. In the European Union, separate collection systems are for used electrical and electronic products.

If printing this document, consider printing only the pages you need and select the double-sided option.

Please help us to conserve the environment we live in!

Notation

Learn the hazard and information symbols used in the product documentation.

Danger messages indicate a hazardous situation which, if not avoided, results in death or serious injury.

Warning messages indicate a hazardous situation which, if not avoided, could result in death or serious injury.

Caution messages indicate a hazardous situation which, if not avoided, could result in minor or moderate injury.

Notice messages indicate a hazardous situation which, if not avoided, may result in equipment or property damage.

Information messages provide additional information, emphasize or provide a useful tip.

Content

Important safety guidelines. 7

Important safety and warning guidelines. 7

Installation safety and warning guidelines. 8

AC power precautions. 9

Laser safety precautions. 9

Light intensity hazard distance. 10

Product labels. 18

General hazards. 18

Mandatory action. 20

Electrical labels. 20

Laser labels. 20

Additional safety hazards. 21

Introduction. 22

Models. 22

What's new in the guide?. 22

Projector overview. 23

Key features. 23

List of components. 23

Accessories. 23

Projector components. 29

Display panel components. 30

Web user interface. 30

IR/wired remote keypad. 32

Related documentation. 34

Accessing product documentation. 35

Downloading interconnect and line drawings. 35

Downloading preventative maintenance schedules. 35

Projector lens calculator tool. 36

Viewing Christie University product training videos. 36

Contact your dealer. 36

Technical support. 37

Installation and setup. 38

Copyright © 2026 Christie Digital Systems USA, Inc. All rights reserved.
If printing, consider using recycled paper and recycle this document after use.

Site requirements. 38
Power requirements. 39
Best practices when installing a projector. 40
Required tools. 40
Preparing the installation site. 40
Lifting and positioning the projector. 41
Projector sides. 42
Leveling the projector. 42
Installing the projector lens. 43
Calibrating the lens motor. 44
Removing the projection lens. 44
Installing the ultra short throw projector lens. 45
Turning on the projector. 47
Projector LED status indicators. 47
Projector LED shutter indicators. 48
Turning off the projector. 49
Checking for the latest software version. 49
Disposing of the product packaging. 49
Completing the installation checklist. 49

Aligning the image. 50

Adjusting offset. 50
Resetting the lens to home position. 50
Selecting a test pattern. 51
Adjusting boresight. 51
Optimizing the integrator zoom and focus. 53
Adjusting the fold mirror. 57
Aligning the image with lens zoom and focus. 59
Adjusting digital micromirror device (DMD) convergence. 59
Mechanically adjusting convergence. 60
Electronically adjusting convergence with the remote. 61
Electronically adjusting convergence through the menu. 63
Running Auto Setup to optimize display settings. 65

Connecting devices and establishing communication. 66

Video Input panel. 66
Configuring video input. 69
Enabling projector communication. 70
Setting the remote access level. 70

Copyright © 2026 Christie Digital Systems USA, Inc. All rights reserved.
If printing, consider using recycled paper and recycle this document after use.

Selecting a port configuration. 70
Selecting a video source. 71
Connecting an HDMI video source. 71
Connecting 12G, 6G, 3G, or HD SDI video source. 72
Connecting a DisplayPort video source. 72
Connecting Christie Link video source. 73
Selecting Christie Link input. 73
Connecting an SDVoE video source. 74
Determining if SDVoE is supported. 74
Connecting to a computer with USB. 74
Connecting to a computer or server with 10/100/1000 base-T Ethernet. 75
Setting up the Ethernet. 75
Communicating with Christie Griffyn® Series through Art-Net. 76
Configuring the 3D Sync in/3D Sync out interface. 79
Configuring the RS232 port. 79
Configuring the GPIO. 80
GPIO connector. 80
Enabling the wired remote keypad. 81

3D setup. 83
3D requirements. 83
Hardware requirements. 83
Software and content requirements. 83
Active stereo 3D configuration. 84
Passive stereo 3D configuration. 85
3D system timing. 85
3D input video configurations. 85
Setting up a single projector to display 3D content. 86
Enabling 3D mode. 86
Confirming the emitter setup. 86
Configuring the projector for the 3D source. 87
Connecting devices to the 3D sync ports. 87

Performing a backup. 88

Regulatory. 89
Safety. 89
Electro-magnetic compatibility. 89
Emissions. 89

Copyright © 2026 Christie Digital Systems USA, Inc. All rights reserved.
If printing, consider using recycled paper and recycle this document after use.

Immunity. 90
California law on security. 90
Environmental. 90

Copyright © 2026 Christie Digital Systems USA, Inc. All rights reserved.
If printing, consider using recycled paper and recycle this document after use.

Important safety guidelines

To prevent personal injury and to protect the device from damage, read and follow these safety precautions. This projector is intended for use in a non-cinema environment.

Important safety and warning guidelines

Read all safety and warning guidelines before installing or operating the projector.

This projector is intended for use in a non-cinema environment.

This projector must be operated in an environment that meets the operating range specification. Use only the attachments and/or accessories recommended by Christie. Use of others may result in the risk of fire, shock, or personal injury.

Warning! If not avoided, the following could result in death or serious injury.

- This product must be operated in an environment that meets the operating range as specified in this document.
- Do not look directly into the lens when the light source is on. The extreme high brightness can cause permanent eye damage.
- EXTREME BRIGHTNESS! When accessing a restricted access location for product service or maintenance, avoid exposure to the product beam path by turning off the product power and disconnecting the product from AC power, or by shuttering the light source to avoid emissions from the front aperture.
- FIRE HAZARD! Keep hands, clothes, and all combustible material away from the concentrated light beam of the projector.
- Keep fingers and other body parts away from the moving parts in the product. Tie back long hair, and remove jewelry and loose clothing before manually adjusting the product.
- FIRE AND SHOCK HAZARD! Use only the attachments, accessories, tools, and replacement parts specified by Christie.
- Do not operate the product without a lens installed.
- Always use a lens plug when installing or moving the product. This prevents contaminants from entering the product.
- RADIATION HAZARD! Use of controls or adjustments, or performing procedures other than those specified may result in hazardous radiation exposure.
- EXPLOSION HAZARD! Replacement battery must be of the correct type.
- EXPLOSION HAZARD! Dispose of the battery according to local area regulations.

Caution! If not avoided, the following could result in minor or moderate injury.

- TRIP OR FIRE HAZARD! Position all cables where they cannot contact hot surfaces, be pulled, be tripped over, or damaged by persons walking on or objects rolling over the cables.

Copyright © 2026 Christie Digital Systems USA, Inc. All rights reserved.
If printing, consider using recycled paper and recycle this document after use.

Installation safety and warning guidelines

Read all safety and warning guidelines before installing the projector.

Warning! If not avoided, the following could result in death or serious injury.

- Possible hazardous optical radiation emitted from this product. (Risk group 3)
- Christie products must be installed and serviced by Christie qualified technicians.
- Do not operate the product without all of its covers in place.
- A minimum of four people or appropriately rated lift equipment is required to safely lift, install, or move the product.
- Always install safety straps when the frame and projector are installed overhead.
- Observe load ratings and applicable local safety codes.
- When installing the projector in portrait mode, the rigging device must have a sufficient load rating, as identified in this manual.
- Do not stack more than two projectors in landscape orientation.
- This product must be installed within a restricted access location not accessible by the general public.
- Install the product so users and the audience cannot enter the restricted area at eye level.
- Only personnel who are trained on the precautions for the restricted access location can be granted entry to the area.
- Only Christie qualified technicians are permitted to open product enclosures.
- Prior to rigging the projector, inspect the quarter-turn fasteners on the covers to make sure they are safely secured.
- Prior to rigging the projector, always tighten the lock nut on the projector feet against the bottom of the projector to lock the feet. Otherwise, the feet must be removed.

Caution! If not avoided, the following could result in minor or moderate injury.

- ELECTRICAL and BURN HAZARD! Use caution when accessing internal components. Wait for the product to cool down before accessing the internal components for installation, service, or performing optical adjustments.
- Only Christie qualified technicians are authorized to use the tools provided in the toolbox.

Copyright © 2026 Christie Digital Systems USA, Inc. All rights reserved.
If printing, consider using recycled paper and recycle this document after use.

AC power precautions

Read all safety and warning guidelines before connecting to AC power.

Warning! If not avoided, the following could result in death or serious injury.

- SHOCK HAZARD! Only use the AC power cord provided with the product or recommended by Christie.
- FIRE AND SHOCK HAZARD! Do not attempt operation unless the power cord, power socket, and power plug meet the appropriate local rating standards.
- SHOCK HAZARD! Do not attempt operation if the AC supply is not within the specified voltage and current, as specified on the license label.
- SHOCK HAZARD! The AC power cord must be inserted into an outlet with grounding.
- SHOCK HAZARD! Disconnect the product from AC before installing, moving, servicing, cleaning, removing components, or opening any enclosure.
- Install the product near an easily accessible AC receptacle.

Caution! If not avoided, the following could result in minor or moderate injury.

- FIRE HAZARD! Do not use a power cord, harness, or cable that appears damaged.
- FIRE OR SHOCK HAZARD! Do not overload power outlets and extension cords.
- SHOCK HAZARD! Power supply uses double pole/neutral fusing.

Laser safety precautions

Read all safety and warning guidelines before operating the projector laser.

Warning! If not avoided, the following could result in death or serious injury.

- PERMANENT/TEMPORARY BLINDNESS HAZARD! No direct exposure to the beam must be permitted. Class 1 Laser Product - Risk Group 3 according to IEC 60825-1:2014 and IEC 62471-5:2015.
- Possible hazardous optical radiation emitted from this product. (Risk group 3)
- Only Christie qualified technicians who are knowledgeable about the hazards associated with laser use, high-voltage, and high temperatures generated by the product are authorized to assemble, install, and service the Christie Laser Projection System.
- Do not look directly into the lens when the light source is on. The extreme high brightness can cause permanent eye damage.
- Do not operate the product without all of its covers in place.

Copyright © 2026 Christie Digital Systems USA, Inc. All rights reserved.
If printing, consider using recycled paper and recycle this document after use.

Light intensity hazard distance

This projector has been classified as Risk Group 3 as per the IEC62471 standard due to possible hazardous optical and thermal radiation being emitted.

Warning! If not avoided, the following could result in serious injury.

- PERMANENT/TEMPORARY BLINDNESS HAZARD! No direct exposure to the beam must be permitted. Class 1 Laser Product - Risk Group 3 according to IEC 60825-1:2014 and IEC 62471-5:2015.
- PERMANENT/TEMPORARY BLINDNESS HAZARD! Operators must control access to the beam within the hazard distance or install the product at the height that prevents exposure of spectators' eyes within the hazard distance. The hazard and no access zones are based on the type of venue the projector is installed in. For restrained environments, the hazard zone must be no lower than 2.5 meters/8.2 feet (US installations) or 2.0 meters/6.6 feet (global installations) above any surface upon which any persons are permitted to stand and the horizontal clearance to the hazard zone must be a minimum 1.0 meters (3.3 feet). For unrestrained environments, the hazard zone must be no lower than 3.0 meters (9.8 feet) above the floor and the horizontal clearance to the hazard zone must be a minimum 2.5 meters (8.2 feet).
- EXTREME BRIGHTNESS! Do not place reflective objects in the product light path.

The following show the zones for ocular and skin hazard distances.

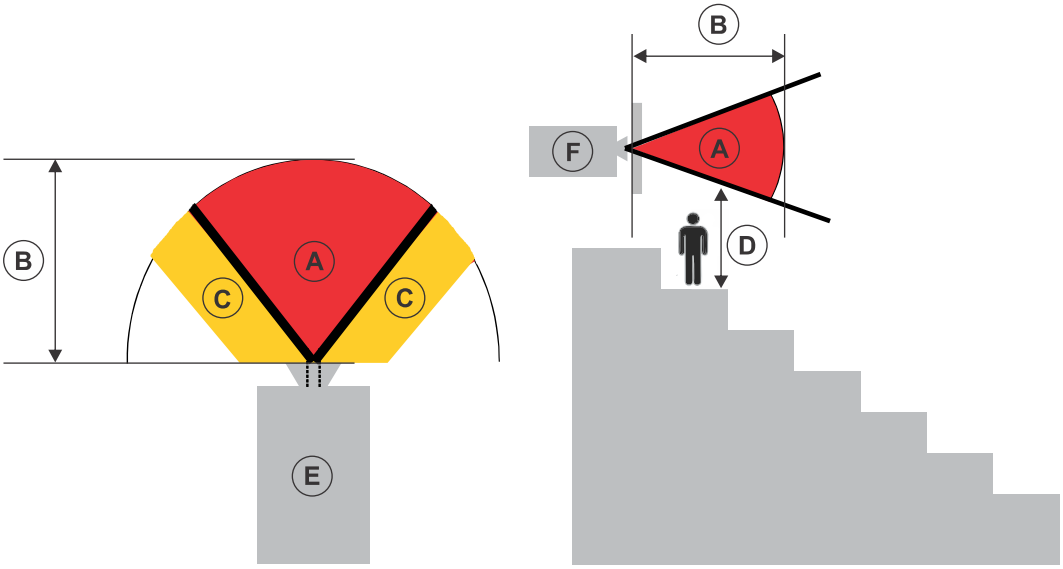

- A—Hazard zone. The region of space where the projection light from the projector is above emission limits for Risk Group 2. The light intensity may cause eye damage after a momentary or brief exposure (before a person can avert their eyes away from the light source). The light may cause skin burns to occur.
- B—Hazard distance. Operators must control access to the beam within the hazard distance or install the product preventing potential exposure of the spectators' eyes from being in the hazard distance.
- C—No access zone. The no access zone must be followed based on the type of venue the projector is installed in.
  - For restrained environments like theaters and facilities where the audience is controlled with formal structures, supervision, or physical constraints, the no access zone must be no less than 1.0 meters (3.3 feet).

Copyright © 2026 Christie Digital Systems USA, Inc. All rights reserved.
If printing, consider using recycled paper and recycle this document after use.

    - For unrestrained environments like a concert venue or facility that has actions by individuals that are not controlled or guided by formal structures, supervision, or physical constraints and therefore may include unexpected actions that increase the likelihood of accidental hazardous exposure to optical radiation, the no access zone must be no less than 2.5 meters (8.2 feet).
- D—Vertical distance to hazard zone. The hazard zone above the floor must be followed based on the type of venue the projector is installed in.
    - For restrained environments like theaters and facilities where the audience is controlled with formal structures, supervision, or physical constraints, the hazard zone must be no lower than 2.5 meters/8.2 feet (US installations) or 2.0 meters/6.6 feet (global installations) above any surface upon which any persons are permitted to stand.
    - For unrestrained environments like a concert venue or facility that has actions by individuals that are not controlled or guided by formal structures, supervision, or physical constraints and therefore may include unexpected actions that increase the likelihood of accidental hazardous exposure to optical radiation, the hazard zone must be no lower than 3.0 meters (9.8 feet) above the floor.

  If the vertical distance to hazard zone requirement (Zone D) is satisfied, the horizontal clearance distance (Zone C) is not needed.
- E—Represents the top view of the projector.
- F—Represents the side view of the projector.

The following table lists the hazard distance for the Christie projector lens with the zoom adjusted to its most hazardous position.

Griffyn® 4K32-RGB

Projection Lens	Part Number	Hazard Distance (m)	Notes
High brightness			
0.38:1 fixed	144-136101-XX	1.0	Brightness is reduced up to 30% when using the 0.38:1 lens. Focus drift occurs with this lens when switching between prolonged periods of light and dark content.
0.72:1fixed	144-110103-XX	1.0	—
0.9:1 fixed	144-111014-XX	1.2	—
1.13-1.31:1 zoom (Discontinued)	144-103105-XX	1.7	—
1.13-1.66:1 zoom	144-129103-XX	2.2	—
1.31-1.63:1 zoom (Discontinued)	144-104106-XX	2.1	—
1.45-2.17:1 zoom	144-130105-XX	2.8	—
1.63-2.17:1 zoom (Discontinued)	144-105107-XX	2.8	—
1.99-2.71:1 zoom (Discontinued)	144-106108-XX	3.4	—
2.71-3.89:1 zoom	144-107109-XX	4.9	—
3.89-5.43:1 zoom	144-108100-XX	6.9	Not available in the USA.

Copyright © 2026 Christie Digital Systems USA, Inc. All rights reserved.
If printing, consider using recycled paper and recycle this document after use.

Projection Lens	Part Number	Hazard Distance (m)	Notes
Ultra high contrast			
0.72:1 fixed (Discontinued)	163-116109-XX	1.0	—
0.9:1 fixed	163-117100-XX	1.0	—
1.13-1.66:1 zoom	163-118101-XX	1.8	—
1.45-2.17:1 zoom	163-119102-XX	2.4	—
1.95-3.26:1 zoom	163-120103-XX	3.4	—
2.71-3.89:1 zoom	163-121105-XX	4.1	—
3.89-5.43:1 zoom	163-122106-XX	5.8	Not available in the USA.

Griffyn® 4K35-RGB

Projection lens	Part number	Hazard distance (m)	Category	Notes
Fixed high brightness				
0.38:1 fixed	144-136101-XX	N/A	RG2	Brightness is reduced up to 30% when using the 0.38:1 lens. Focus drift occurs with this lens when switching between prolonged periods of light and dark content.
0.72:1 fixed	144-110103-XX			—
0.9:1 fixed	144-111014-XX	See hazard distance graph below	RG3	—
Zoom high brightness				
1.13-1.31:1 zoom (Discontinued)	144-103105-XX	See hazard distance graph below	RG3	—
1.13-1.66:1 zoom	144-129103-XX			—
1.31-1.63:1 zoom (Discontinued)	144-104106-XX			—
1.45-2.17:1 zoom	144-130105-XX			—
1.63-2.17:1 zoom (Discontinued)	144-105107-XX			—
1.95-3.26:1 zoom	144-131106-XX			—
1.99-2.71:1 zoom (Discontinued)	144-106108-XX			—
2.71-3.89:1 zoom	144-107109-XX			—

Copyright © 2026 Christie Digital Systems USA, Inc. All rights reserved.
If printing, consider using recycled paper and recycle this document after use.

Projection lens	Part number	Hazard distance (m)	Category	Notes
3.89-5.43:1 zoom	144-108100-XX			—
4.98-7.69:1 zoom	144-109101-XX			Requires a 185 mm lens hood extension (P/N: 163-168106-XX) to use with this product.
Fixed ultra high contrast				
0.72:1 fixed (Discontinued)	163-116109-XX	N/A	RG2	—
0.9:1 fixed	163-117100-XX			—
Zoom ultra high contrast				
1.13-1.66:1 zoom	163-118101-XX	See hazard distance graph below	RG3	—
1.45-2.17:1 zoom	163-119102-XX			—
1.95-3.26:1 zoom	163-120103-XX			—
2.71-3.89:1 zoom	163-121105-XX			—
3.89-5.43:1 zoom	163-122106-XX			—

Copyright © 2026 Christie Digital Systems USA, Inc. All rights reserved.
If printing, consider using recycled paper and recycle this document after use.

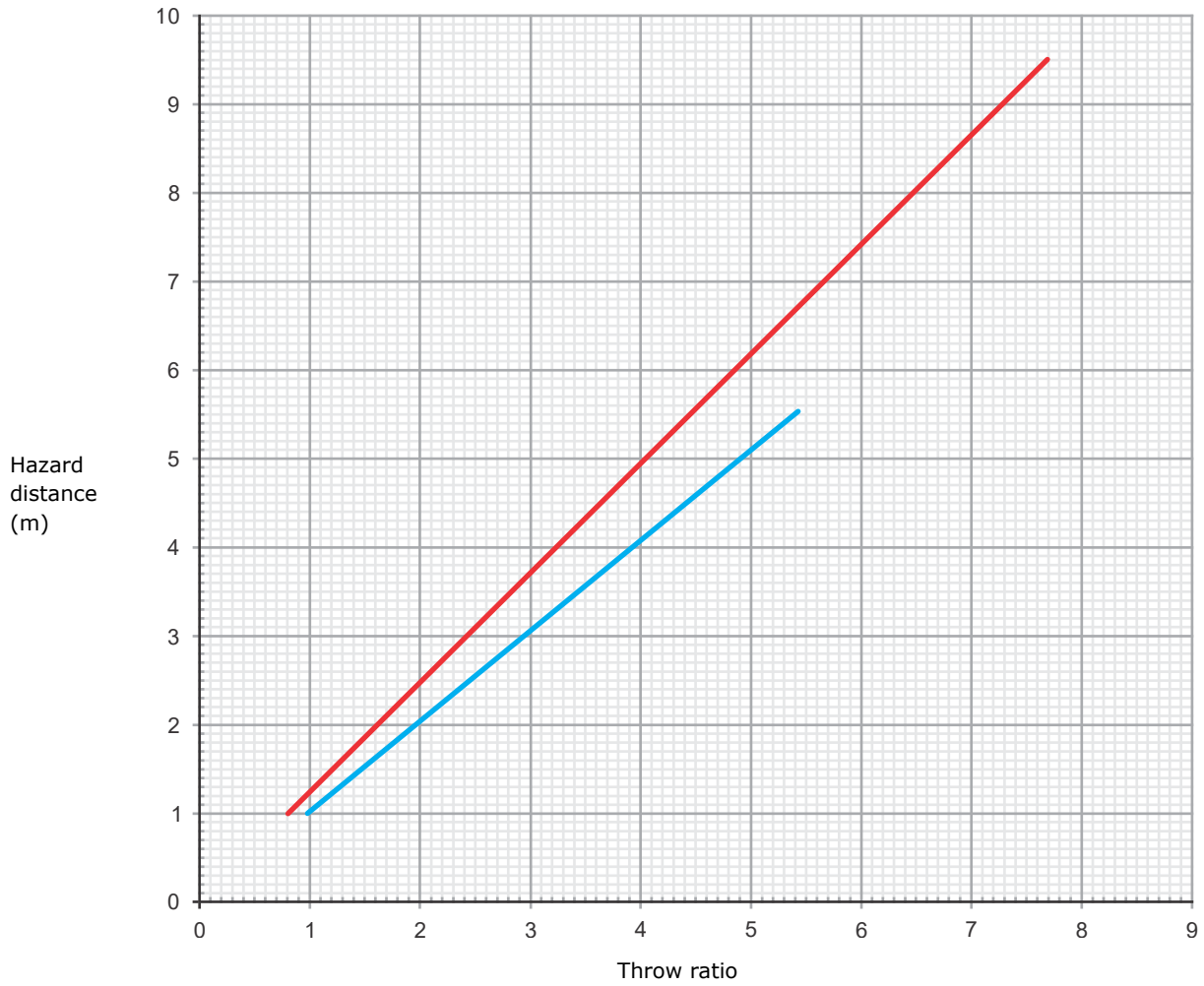

High brightness lenses

Ultra high contrast lenses

Griffyn® 4K50-RGB

Projection lens	Part number	Hazard distance (m)	Category	Notes
Fixed high brightness				
0.38:1 fixed	144-136101-XX	N/A	RG2	Brightness is reduced up to 30% when using the 0.38:1 lens. Focus drift occurs with this lens when switching between prolonged

Copyright © 2026 Christie Digital Systems USA, Inc. All rights reserved.
If printing, consider using recycled paper and recycle this document after use.

Projection lens	Part number	Hazard distance (m)	Category	Notes
				periods of light and dark content.
0.72:1 fixed	144-110103-XX	See hazard distance graph below	RG3	—
0.9:1 fixed	144-111014-XX			—
Zoom high brightness				
1.13-1.31:1 zoom (Discontinued)	144-103105-XX	See hazard distance graph below	RG3	—
1.13-1.66:1 zoom	144-129103-XX			—
1.31-1.63:1 zoom (Discontinued)	144-104106-XX			—
1.45-2.17:1 zoom	144-130105-XX			—
1.63-2.17:1 zoom (Discontinued)	144-105107-XX			—
1.95-3.26:1 zoom	144-131106-XX			Requires a 30 mm lens hood extension (P/N: 163-170109-XX) to use with this product.
1.99-2.71:1 zoom (Discontinued)	144-106108-XX			—
2.71-3.89:1 zoom	144-107109-XX			Requires a 185 mm lens hood extension (P/N: 163-168106-XX) to use with this product.
3.89-5.43:1 zoom	144-108100-XX			Requires a 185 mm lens hood extension (P/N: 163-168106-XX) to use with this product.
4.98-7.69:1 zoom	144-109101-XX			Requires a 410 mm lens hood extension (P/N: 163-167105-XX) to use with this product.
Fixed ultra high contrast				
0.72:1 fixed (Discontinued)	163-116109-XX	N/A	RG2	—
0.9:1 fixed	163-117100-XX	See hazard distance graph below	RG3	—
Zoom ultra high contrast				

Copyright © 2026 Christie Digital Systems USA, Inc. All rights reserved.
If printing, consider using recycled paper and recycle this document after use.

Projection lens	Part number	Hazard distance (m)	Category	Notes
1.13-1.66:1 zoom	163-118101-XX	See hazard distance graph below	RG3	—
1.45-2.17:1 zoom	163-119102-XX			—
1.95-3.26:1 zoom	163-120103-XX			Requires a 30 mm lens hood extension (P/N: 163-170109-XX) to use with this product.
2.71-3.89:1 zoom	163-121105-XX			Requires a 185 mm lens hood extension (P/N: 163-168106-XX) to use with this product.
3.89-5.43:1 zoom	163-122106-XX			Requires a 185 mm lens hood extension (P/N: 163-168106-XX) to use with this product.

Copyright © 2026 Christie Digital Systems USA, Inc. All rights reserved.
If printing, consider using recycled paper and recycle this document after use.

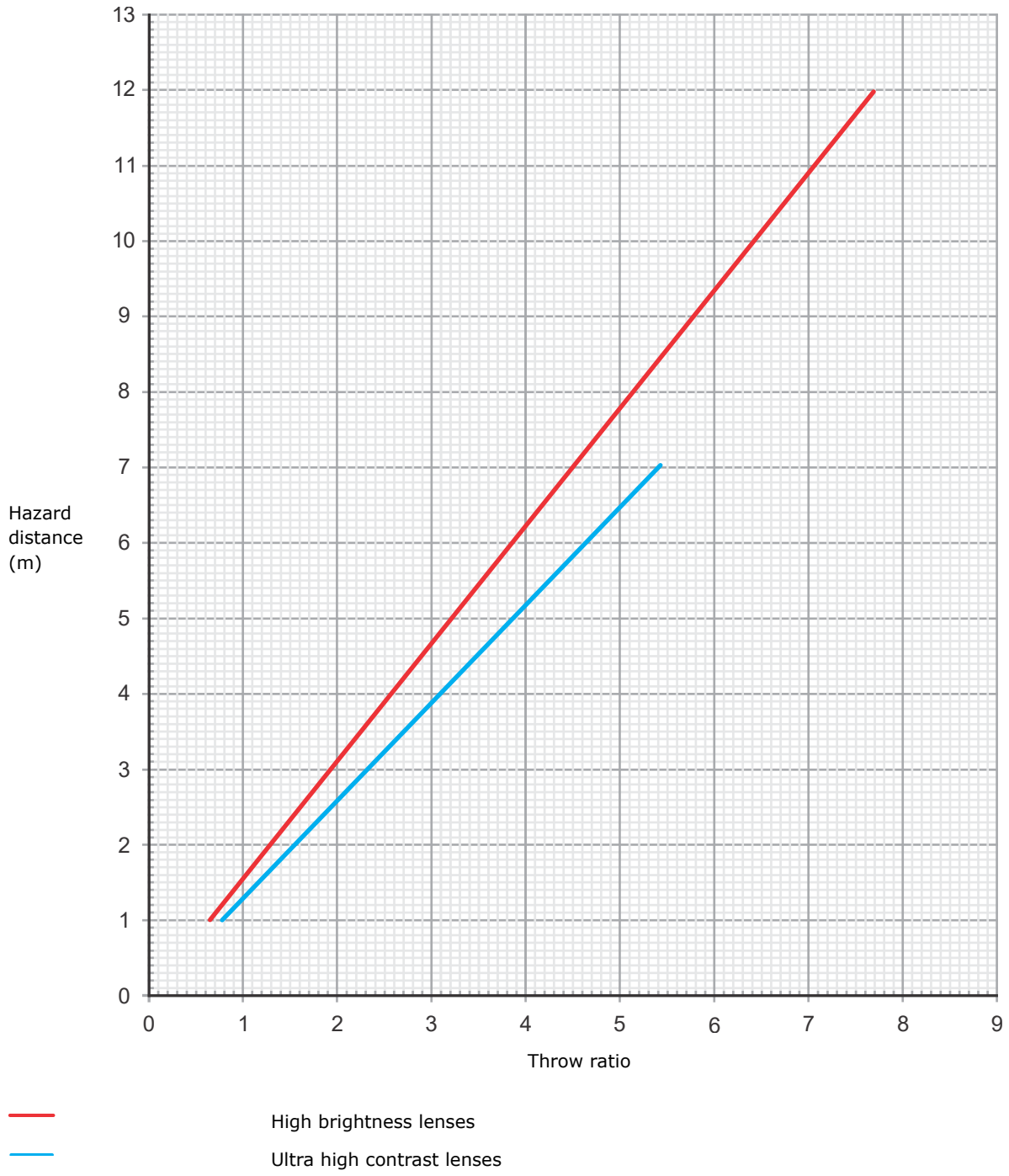

For Installations in the United States

The following must be in place for laser-illuminated projector installations in the United States:

- Any human access to the hazard zone, if applicable, must be restricted by barriers to enforce the no access zone.

Copyright © 2026 Christie Digital Systems USA, Inc. All rights reserved.
If printing, consider using recycled paper and recycle this document after use.

- Permanent show installations containing Risk Group 3 laser-illuminated projectors must meet the following conditions:
  - Installed by Christie or by Christie-authorized and trained installers.

    Refer to the EXTERNAL - Laser safety awareness training (Course code: CS-ELSA-01) on the *http://www.christieuniversity.com* site.
  - Performed according to instructions provided by Christie.
  - Make sure the projection system is securely mounted or immobilized to prevent unintended movement or misalignment of the projections.
- A copy of the FDA variance approval letter must be with the operator or other responsible individual.
- For temporary installations, the FDA variance holder must maintain complete records of all show itineraries with dates, locations, operator name, and contact information clearly and completely identified.
- The Christie Laser Projection System Installation Checklist must be fully completed after the installation and sent to *lasercompliance@christiedigital.com*. A copy can remain on-site. This checklist can be found as a separate document in the accessory box with the manual.
- Certain US states have additional laser regulatory requirements. Contact *lasercompliance@christiedigital.com* for additional regulatory requirements.

Product labels

Learn about the labels that may be used on the product. Labels on your product may be yellow or black and white.

General hazards

Hazard warnings also apply to accessories once they are installed in a Christie product connected to power.

Fire and Shock Hazard	
	To prevent fire or shock hazards, do not expose this product to rain or moisture. Do not alter the power plug, overload the power outlet, or use it with extension cords. Do not remove the product enclosure. Only Christie qualified technicians are authorized to service the product.

Electrical Hazard	
	Risk of electric shock. Do not remove the product enclosure. Only Christie qualified technicians are authorized to service the product.

Copyright © 2026 Christie Digital Systems USA, Inc. All rights reserved.
If printing, consider using recycled paper and recycle this document after use.

Warning! If not avoided, the following could result in death or serious injury.

Electric shock hazard. To avoid personal injury, disconnect all power sources before performing maintenance or service.

Electrocution hazard. To avoid personal injury, always disconnect all power sources before performing maintenance or service procedures.

Laser hazard. To avoid personal injury, avoid eye or skin exposure to direct or scattered radiation.

Voltage hazard. To avoid personal injury, always disconnect all power sources before performing maintenance or service procedures.

Caution! If not avoided, the following could result in minor or moderate injury.

Hot surface hazard. To avoid personal injury, allow the product to cool for the recommended cool down time before touching or handling for maintenance or service.

Burn hazard. To avoid personal injury, allow the product to cool for the recommended cool down time before handling for maintenance or service.

Pinch hazard. To avoid personal injury, keep hands clear and loose clothing tied back.

Moving parts hazard. To avoid personal injury, keep hands clear and loose clothing tied back.

Moving fan blades. To avoid personal injury, keep hands clear and loose clothing tied back. Always disconnect all power sources before performing maintenance or service procedures.

Notice. If not avoided, the following could result in property damage.

General hazard.

Not for household use.

Copyright © 2026 Christie Digital Systems USA, Inc. All rights reserved.
If printing, consider using recycled paper and recycle this document after use.

Mandatory action

Caution! If not avoided, the following could result in minor or moderate injury.

SHOCK HAZARD! Disconnect all power sources before performing maintenance or service procedures.

Consult the service manual.

Electrical labels

Indicates the presence of a protective earth ground.

Laser labels

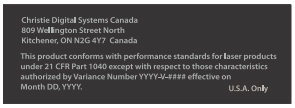

FDA laser variance (US projectors only)

This product is in conformity with performance standards for laser products under 21 CFR 1040, except with respect to those characteristics authorized by Variance Number 2018-V-3898 effective on November 21, 2018.

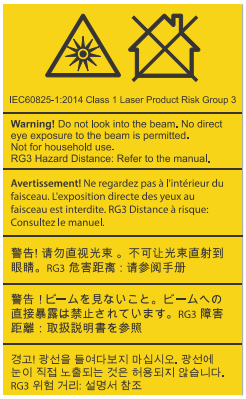

Indicates a light hazard. Do not look directly into the lens. The extreme high brightness can cause permanent eye damage. Class 1 Laser Product - Risk Group 3 according to IEC 60825-1: 2014 and IEC 62471-5:2015

Indicates Class 4 laser radiation when open. Avoid eye or skin exposure to direct or scattered radiation.

Copyright © 2026 Christie Digital Systems USA, Inc. All rights reserved.
If printing, consider using recycled paper and recycle this document after use.

Indicates Class 4 laser radiation. Avoid eye or skin exposure to direct or scattered radiation.

Additional safety hazards

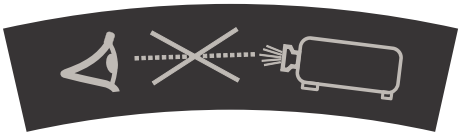

Do not look directly into the lens. The extremely high brightness can cause permanent eye damage.

Indicates high leakage current. Earth connection essential before connecting the power supply.

Copyright © 2026 Christie Digital Systems USA, Inc. All rights reserved.
If printing, consider using recycled paper and recycle this document after use.

Introduction

This manual is intended for professionally trained operators of Christie high-brightness projection systems.

The illustrations in this document are for representation only and may not depict your model exactly.

Only Christie qualified technicians who are knowledgeable about the hazards associated with laser use, high-voltage, and the high temperatures generated by the projector lasers are authorized to assemble, install, and service the projector.

For complete Christie Griffyn® Series product documentation and technical support, go to *www.christiedigital.com*.

Models

The following models are supported for the Christie Griffyn® Series.

- Griffyn® 4K32-RGB
- Griffyn® 4K35-RGB
- Griffyn® 4K50-RGB

What's new in the guide?

The following updates have been made to the guide.

-25 updates:

- Updated the steps in the *Optimizing the integrator zoom and focus* (on page 53) topic.
- Updated the test pattern in the *Adjusting the fold mirror* (on page 57) topic.

-24 updates:

- Indicated the 0.72:1 ultra high contrast (UHC) fixed lens (P/N: 163-116109-XX) is discontinued in the *Light intensity hazard distance* (on page 10) and *Accessories* (on page 23) topics.
- Updated step 8 in the Optimizing the integrator zoom and focus topic to enable Maintenance mode before powering on the projector into full power mode.

-23 updates:

- Highlighted why optimizing the integrator zoom is a critical adjustment the in the Optimizing the integrator zoom and focus topic.

Copyright © 2026 Christie Digital Systems USA, Inc. All rights reserved.
If printing, consider using recycled paper and recycle this document after use.

Projector overview

Learn about the Christie Griffyn® Series projector.

Christie Griffyn® Series is a professional quality 3DLP® RGB laser projector. The high-brightness Christie Griffyn® Series is designed to meet the special demands found in large venues, live events, and high-usage environments. With reliable Christie RealLaser™ illumination integrated in a rugged chassis and ultra-fast processing of Christie TruLife+™ electronics, the Christie Griffyn® Series is the go-to solution for demanding, large venue events and applications.

Key features

Understand the important features of the projector.

- Long lasting, reliable Christie RGB pure laser illumination
- Compact form with direct-coupled laser source integrated into the projector chassis
- LiteLOC™ feature for constant image brightness and color
- Easily adjusted electronic convergence using the remote control to maintain a perfect image
- Field adjustable RGB convergence, boresight, and optical path
- Omnidirectional operation for unrestricted design and installation flexibility
- Christie TruLife+™ electronics for ultra-high resolution, high frame rate video up to 120 frames per second
- Simple integration and connectivity
- Compatible with Christie Mystique™, Guardian, and Twist™
- Compatible with existing suite of 2K/4K fixed and zoom lenses
- Full-color LCD display to provide information at-a-glance
- Integrated keypad control interface
- Dynamic fan control for quiet operation

List of components

Verify all components were received with the projector.

- Power cord
- IR remote keypad
- Tools

Accessories

Learn about the accessories (sold separately) available for the projector.

If using a shorter throw lens and switching between dark and light content, focus drift can occur.

Copyright © 2026 Christie Digital Systems USA, Inc. All rights reserved.
If printing, consider using recycled paper and recycle this document after use.

Griffyn® 4K32-RGB lenses

Projection lens	Part number	Notes
Fixed high brightness		
0.38:1 fixed	144-136101-XX	Brightness is reduced up to 30% when using the 0.38:1 lens. Focus drift occurs with this lens when switching between prolonged periods of light and dark content.
0.72:1 fixed	144-101103-XX	—
0.9:1 fixed	144-111014-XX	—
Zoom high brightness		
1.13-1.31:1 zoom (Discontinued)	144-103105-XX	—
1.13-1.66:1 zoom	144-129103-XX	—
1.31-1.63:1 zoom (Discontinued)	144-104106-XX	—
1.45-2.17:1 zoom	144-130105-XX	—
1.63-2.17:1 zoom (Discontinued)	144-105107-XX	—
1.95-3.26:1 zoom	144-131106-XX	—
1.99-2.71:1 zoom (Discontinued)	144-106108-XX	—
2.71-3.89:1 zoom	144-107109-XX	—
3.89-5.43:1 zoom	144-108100-XX	Not available in the USA.
Fixed ultra high contrast		
0.72:1 fixed (Discontinued)	163-116109-XX	—
0.9:1 fixed	163-117100-XX	—
Zoom ultra high contrast		
1.13-1.66:1 zoom	163-118101-XX	—
1.45-2.17:1 zoom	163-119102-XX	—
1.95-3.26:1 zoom	163-120103-XX	—
2.71-3.89:1 zoom	163-121105-XX	—
3.89-5.43:1 zoom	163-122106-XX	Not available in the USA.

Griffyn® 4K35-RGB lenses

Projection lens	Part number	Notes
Fixed high brightness		
0.38:1 fixed	144-136101-XX	Brightness is reduced up to 30% when using the 0.38:1 lens. Focus drift occurs with this lens when

Copyright © 2026 Christie Digital Systems USA, Inc. All rights reserved.
If printing, consider using recycled paper and recycle this document after use.

Projection lens	Part number	Notes
		switching between prolonged periods of light and dark content.
0.72:1 fixed	144-110103-XX	—
0.9:1 fixed	144-111014-XX	—
Zoom high brightness		
1.13-1.31:1 zoom (Discontinued)	144-103105-XX	—
1.13-1.66:1 zoom	144-129103-XX	—
1.31-1.63:1 zoom (Discontinued)	144-104106-XX	—
1.45-2.17:1 zoom	144-130105-XX	—
1.63-2.17:1 zoom (Discontinued)	144-105107-XX	—
1.95-3.26:1 zoom	144-131106-XX	—
1.99-2.71:1 zoom (Discontinued)	144-106108-XX	—
2.71-3.89:1 zoom	144-107109-XX	—
3.89-5.43:1 zoom	144-108100-XX	—
4.98-7.69:1 zoom	144-109101-XX	Requires a 185 mm lens hood extension (P/N: 163-168106-XX) to use with this product.
Fixed ultra high contrast		
0.72:1 fixed (Discontinued)	163-116109-XX	—
0.9:1 fixed	163-117100-XX	—
Zoom ultra high contrast		
1.13-1.66:1 zoom	163-118101-XX	—
1.45-2.17:1 zoom	163-119102-XX	—
1.95-3.26:1 zoom	163-120103-XX	—
2.71-3.89:1 zoom	163-121105-XX	—
3.89-5.43:1 zoom	163-122106-XX	—

Griffyn® 4K50-RGB lenses

Projection lens	Part number	Notes
Fixed high brightness		
0.38:1 fixed	144-136101-XX	Brightness is reduced up to 30% when using the 0.38:1 lens. Focus drift occurs with this lens when switching between prolonged periods of light and dark content.
0.72:1 fixed	144-110103-XX	—

Copyright © 2026 Christie Digital Systems USA, Inc. All rights reserved.
If printing, consider using recycled paper and recycle this document after use.

Projection lens	Part number	Notes
0.9:1 fixed	144-111014-XX	—
Zoom high brightness		
1.13-1.31:1 zoom (Discontinued)	144-103105-XX	—
1.13-1.66:1 zoom	144-129103-XX	—
1.31-1.63:1 zoom (Discontinued)	144-104106-XX	—
1.45-2.17:1 zoom	144-130105-XX	—
1.63-2.17:1 zoom (Discontinued)	144-105107-XX	—
1.95-3.26:1 zoom	144-131106-XX	Requires a 30 mm lens hood extension (P/N: 163-170109-XX) to use with this product.
1.99-2.71:1 zoom (Discontinued)	144-106108-XX	—
2.71-3.89:1 zoom	144-107109-XX	Requires a 185 mm lens hood extension (P/N: 163-168106-XX) to use with this product.
3.89-5.43:1 zoom	144-108100-XX	Requires a 185 mm lens hood extension (P/N: 163-168106-XX) to use with this product.
4.98-7.69:1 zoom	144-109101-XX	Requires a 410 mm lens hood extension (P/N: 163-167105-XX) to use with this product.
Fixed ultra high contrast		
0.72:1 fixed (Discontinued)	163-116109-XX	—
0.9:1 fixed	163-117100-XX	—
Zoom ultra high contrast		
1.13-1.66:1 zoom	163-118101-XX	—
1.45-2.17:1 zoom	163-119102-XX	—
1.95-3.26:1 zoom	163-120103-XX	Requires a 30 mm lens hood extension (P/N: 163-170109-XX) to use with this product.
2.71-3.89:1 zoom	163-121105-XX	Requires a 185 mm lens hood extension (P/N: 163-168106-XX) to use with this product.
3.89-5.43:1 zoom	163-122106-XX	Requires a 185 mm lens hood extension (P/N: 163-168106-XX) to use with this product.

Filters and coolant

Description	Part number
Light engine air filter for 4K32-RGB	003-001184-XX

Copyright © 2026 Christie Digital Systems USA, Inc. All rights reserved.
If printing, consider using recycled paper and recycle this document after use.

Description	Part number
Light engine air filter for 4K35-RGB and 4K50-RGB (single)	003-007693-XX
Light engine air filter for 4K35-RGB and 4K50-RGB (2-pack)	003-007274-XX
Coolant Propylene Glycol 740	003-005179-XX

Line cords for Griffyn® 4K32-RGB

Description	Part number
250 V/15 A C19 2.5 m cord—Australia	108-582106-XX
250 V/16 A C19 2.5 m cord—China	108-583107-XX
250 V/16 A C19 0.5 m cord—Europe	108-564106-XX
250 V/16 A C19 2.5 m cord—India	108-565107-XX
250 V/16 A C19 2.5 m cord—Japan	108-580104-XX
250 V/16 A C19 2.5 m cord—Korean	108-578101-XX
250 V/20 A C19 2.5 m cord—North America (Locking on projector and wall ends)	108-576109-XX
250 V/20 A C19 2.5 m cord—North America (Locking on projector end only)	108-577100-XX
250 V/20 A C19 cord—South Africa	108-566108-XX
250 V/16 A C19 2.5 m cord—Switzerland	108-581105-XX
250 V/16 A C19 2.5 m cord—United Kingdom	108-579102-XX

Line cords for Griffyn® 4K35-RGB

Description	Part number
250 V/15 A C19 2.5 m cord—Australia	108-582106-XX
250 V/16 A C19 2.5 m cord—China	108-583107-XX
250 V/16 A C19 0.5 m cord—Europe	108-564106-XX
250 V/16 A C19 2.5 m cord—India	108-565107-XX
250 V/16 A C19 2.5 m cord—Japan	108-580104-XX
250 V/16 A C19 0.5 m cord—Korean	108-564106-XX
120 V/15 A C19L 2.5 m cord—North America	108-600107-XX
250 V/20 A C19 2.5 m cord—North America (Locking on projector and wall ends)	108-576109-XX
250 V/20 A C19 2.5 m cord—North America (Locking on projector end only)	108-577100-XX

Copyright © 2026 Christie Digital Systems USA, Inc. All rights reserved.
If printing, consider using recycled paper and recycle this document after use.

Description	Part number
250 V/20 A C19 cord—South Africa	108-566108-XX
250 V/16 A C19 2.5 m cord—Switzerland	108-581105-XX
250 V/16 A C19 2.5 m cord—United Kingdom	108-579102-XX

Line cords for Griffyn® 4K50-RGB

Description	Part number
250 V/32 A IEC309 3.0 m cord—Australia	108-434102-XX
250 V/30 A IEC309 3.0 m cord—China	108-396109-XX
250 V/32 A IEC309 3.0 m cord—Europe	108-429106-XX
250 V/30 A IEC309 3.0 m cord—Japan	108-398101-XX
250 V/30 A IEC309 3.0 m cord—Korean	108-397100-XX
250 V/30 A IEC309 3.0 m cord—North America	108-395108-XX
120 V/15 A IEC309 2.5 m cord—North America	108-601108-XX

Other accessories

Description	Part number	Notes
IR remote	003-120918-XX	—
Christie Mystique™	900-100285-XX 900-100286-XX 900-100274-XX 900-100275-XX	Mystique version 2.6.0 or higher is required for the electronic convergence feature.
Christie Twist™ Premium	156-002103-XX 156-102104-XX	Twist version 2.9 or higher is required for the electronic convergence feature.
Christie Twist™ Pro	156-001102-XX 156-101103-XX	
Christie Guardian	156-134109-XX 156-135100-XX	—
Driver set	003-007010-XX	—
576 mm rigging handles	163-162100-XX	—
774 mm rigging handles	163-125109-XX	—
Rigging Couplers kit	163-128102-XX	—
Zoom Lens Conversion kit	003-005538-XX	—
Fixed Lens Conversion kit	003-005537-XX	—

Copyright © 2026 Christie Digital Systems USA, Inc. All rights reserved.
If printing, consider using recycled paper and recycle this document after use.

Projector components

Identify the main components of the projector.

The illustrations in this topic are for representation only and may not depict your projector model exactly.

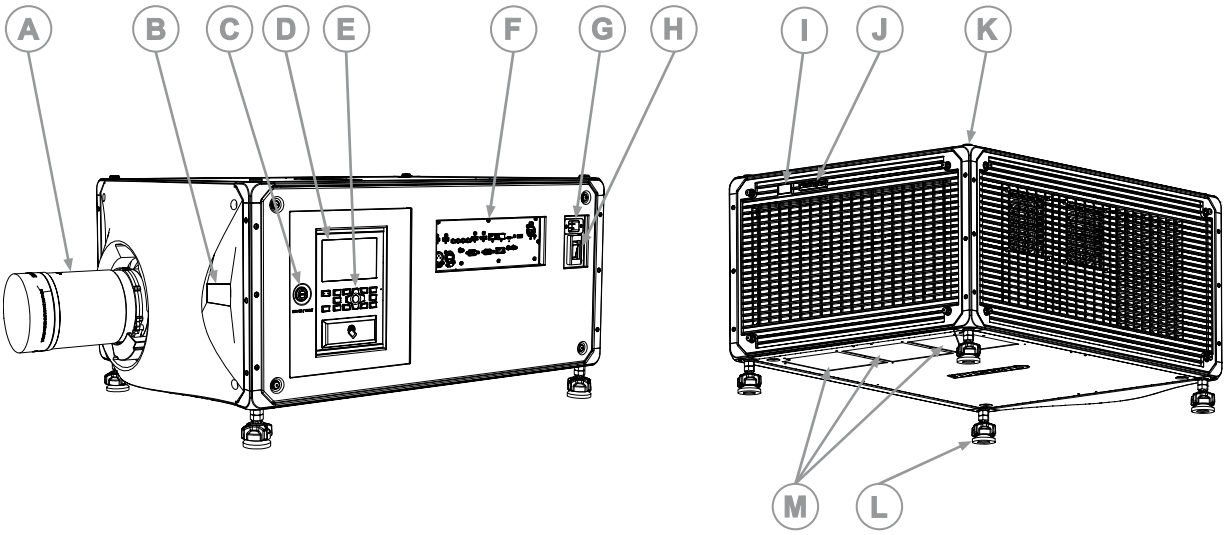

ID	Component	Description
A	Projection lens	A variety of lenses can be used with the projector. Available lenses are listed in the *Christie Griffyn® Series Service Guide (P/N: 020-103329-XX)*.
B	Front IR	Receives transmissions from the IR remote.
C	Service door	Provides access to the fold mirror, optical zoom/focus, and digital micromirror device (DMD) convergence adjustments as well as the tools for Christie qualified technicians.
D	Display panel	Displays the projector menus and status.
E	Keypad interface	Controls the projector.
F	Communication and input panel	Connects media sources to the Video Input panel.
G	AC input	For use with projector power cord.
H	Power on/off switch	Switch to power the projector on or off.
I	Rear IR	Receives transmissions from the IR remote.
J	LED and shutter LED status indicator	Indicates power status and shutter status.
K	Mounting and rigging holes	M12 x 1.75 holes for projector feet installation and for mounting and rigging points. Four holes located on the top, and four located on the bottom.
L	Adjustable feet	Raise or lower these feet when positioning the projector. Make sure the projector is level on all sides and the displayed image appears rectangular without any keystone.
M	Bottom intake plates	Allows full airflow to the projector.

Copyright © 2026 Christie Digital Systems USA, Inc. All rights reserved.
If printing, consider using recycled paper and recycle this document after use.

Display panel components

Identify the main components of the display panel (also known as the home page).

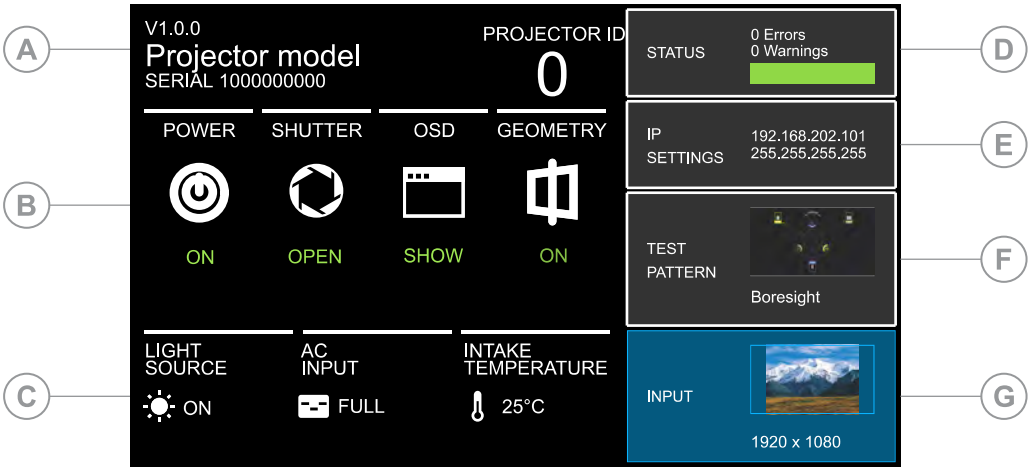

ID	Component	Description
A	Projector Information	Provides information about the projector such as the projector name, serial number, software version, and projector ID.
B	Projector and Component Controls	Indicates the states of the projector and its components.
C	Power and Temperature	Indicates the light source mode, power mode, and intake temperature.
D	Status	Contains information about the health of the projector including the number of warnings and errors. Provides access to the status system.
E	IP Settings	Displays the IP address and subnet values. Provides access to changing the IP settings.
F	Test Pattern	Displays the currently selected test pattern. If no test pattern is selected, Off is displayed. Provides access to the list of test patterns.
G	Input	Displays the signal for the currently selected input. Provides access to the list of input signals.

Web user interface

Use a web browser to use the web user interface (Web UI) to access projector functionality.

The web user interface provides access to the menu functionality, the same overview information as the display panel on the projector with the addition of the optical filter information for Sapphire® 4K40-RGBH and Griffyn™ Series.

Copyright © 2026 Christie Digital Systems USA, Inc. All rights reserved.
If printing, consider using recycled paper and recycle this document after use.

ID	Component	Description
A	Menu	Provides access to the projector menu functionality.
B	Projector information	Provides information about the projector such as the projector name, serial number, software version, projector ID, IP address, and subnet values.
C	Sign Out	Logs out of the web user interface.
D	Projector and component controls	Indicates the states of the projector and its components.
E	Status	Contains information about the health of the projector including the number of warnings and errors. Provides access to the status system.
F	Test pattern	Displays the currently selected test pattern. If no test pattern is selected, Off is displayed. Provides access to the list of test patterns.
G	Input	Displays the signal for the currently selected input. Provides access to the list of input signals.
H	Power and temperature	Indicates the light source mode, power mode, and intake temperature.
I	Optical filter	Lists the type of optical filter installed for Sapphire® 4K40-RGBH and Griffyn® Series. It displays `Not Detected` if no filter is installed.

Copyright © 2026 Christie Digital Systems USA, Inc. All rights reserved.
If printing, consider using recycled paper and recycle this document after use.

ID	Component	Description
		For Griffyn® Series, this user interface component is only displayed when a filter is installed and configured using the Service level Light & Output Settings menu.

Logging into the web user interface

1. In a web browser, enter the IP address of the projector.
2. Log into the web user interface with a valid user name and password.

IR/wired remote keypad

The IR/wired remote keypad controls the projector by way of either wireless communications from a battery-powered infrared (IR) transmitter or a wired interface.

Warning! If not avoided, the following could result in death or serious injury.

- EXPLOSION HAZARD! Replacement battery must be of the correct type.
- EXPLOSION HAZARD! Dispose of the battery according to local area regulations.

To use the IR remote, direct the keypad toward the projector's front or rear IR sensor and select a function key. One of the two IR sensors on the projector detect the signal and relay the commands for internal processing. The remote also offers a connector for wired connections to the projector.

Copyright © 2026 Christie Digital Systems USA, Inc. All rights reserved.
If printing, consider using recycled paper and recycle this document after use.

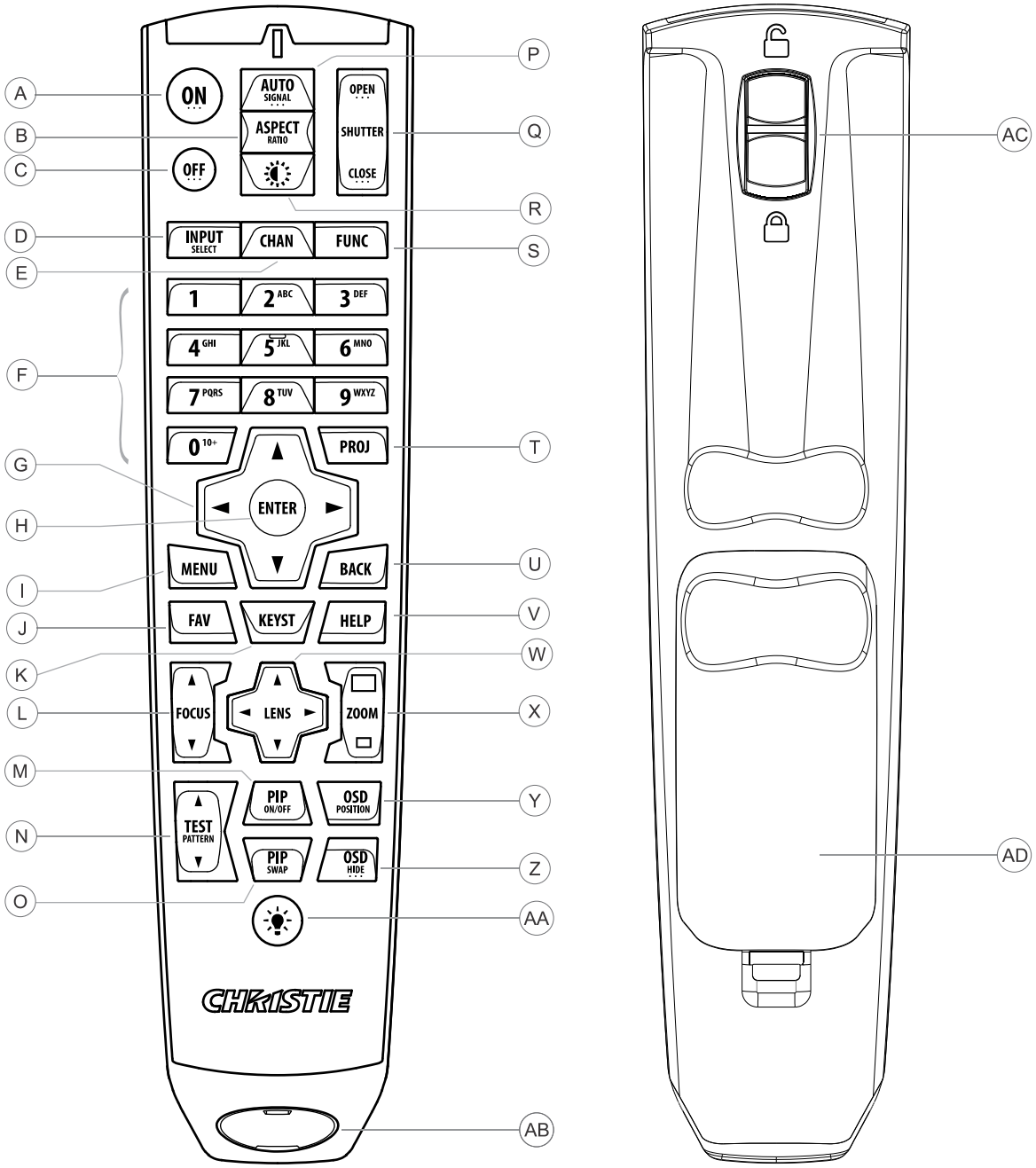

Button	Description
A	Powers on the projector light source.
B	Opens the aspect ratio dialog.
C	Turns off the light source and puts the projector in standby.
D	Selects an active or inactive input on any slot.
E	Not supported.

Copyright © 2026 Christie Digital Systems USA, Inc. All rights reserved.
If printing, consider using recycled paper and recycle this document after use.

Button	Description
F	Enter a number, such as menu, item index or value.
G	Use the arrows to navigate within a menu or to adjust settings.
H	Selects a highlighted menu item and changes or accepts a value.
I	Toggles the menus on/off.
J	Not supported.
K	Opens the keystone dialog.
L	Adjusts the lens focus.
M	Not supported.
N	Displays a test pattern.
O	Not supported.
P	Optimizes the image automatically.
Q	Opens or closes the shutter.
R	Not supported.
S	Initiates a custom action when a number is selected.
T	Selects a projector in multi-projector installations.
U	Returns to the previous menu level or exits menus if at the top level.
V	Displays context-sensitive help.
W	Use the arrows to adjust the lens offset.
X	Adjusts the lens zoom.
Y	Opens the on-screen display position menu.
Z	Shows or hides the on-screen display menus.
AA	Turns the remote backlight on.
AB	Male 3-pin XLR connector used for wired option.
AC	Locks/unlocks the keypad.
AD	Battery door—When replacing a battery, dispose of the used battery or batteries according to local area regulations.

Related documentation

Additional information on this product is available in the following documents.

- *Christie TruLife+ User Guide (P/N: 020-103315-XX)*
- *TruLife+ Supported Video Formats technical reference (P/N: 020-104081-XX)*
- *Christie TruLife+ Status System Guide (P/N: 020-103327-XX)*
- *Christie TruLife+ Serial Commands Guide (P/N: 020-103316-XX)*
- *Christie Griffyn® Series Service Guide (P/N: 020-103329-XX)*

Copyright © 2026 Christie Digital Systems USA, Inc. All rights reserved.
If printing, consider using recycled paper and recycle this document after use.

- *Christie Griffyn® Series Line Drawing (P/N: 020-103414-XX, 020-103664-XX, and 020-103647-XX)*
- *Christie Griffyn® Series Interconnect drawing (P/N: 020-103641-XX and 020-103640-XX)*

Accessing product documentation

For installation, user, and service information, see the product documentation available on the Christie website. Read all instructions before installing, using, or servicing this product.

1. Access the documentation from the Christie website:
   - Go to this URL: *https://bit.ly/3fbZLx8* or *https://www.christiedigital.com/products/projectors/all-projectors/griffyn-series/*.
   - Scan the QR code using a QR code reader app on a smartphone or tablet.
2. To access service information, sign into the Partner Portal.
3. On the product page, switch to the **Downloads** tab.

Downloading interconnect and line drawings

The interconnect diagram illustrates the path of electrical connections between modules. Manufacturer's part numbers are included. Part numbers are subject to change.

Line drawings provide product dimensions and sizes for installation.

To download the latest interconnect diagram or line drawings:

1. Go to *www.christiedigital.com*.
2. Sign into the Partner Portal.
3. Navigate to your model.
4. Switch to the **Downloads** tab and expand **Line drawings** section.

If the interconnect diagram or line drawings are not available on the Christie website, contact Christie Technical Support.

Downloading preventative maintenance schedules

Preventative maintenance is an important part of the continued and proper operation of your product. Failure to perform maintenance as required and according to the maintenance schedule specified by Christie voids the warranty.

If you require more information, contact Christie Technical Support.

To download the latest preventative maintenance schedule:

1. Go to *www.christiedigital.com*.
2. Sign into the Partner Portal.

Copyright © 2026 Christie Digital Systems USA, Inc. All rights reserved.
If printing, consider using recycled paper and recycle this document after use.

3. Navigate to your model.
4. Switch to the **Downloads** tab and expand **Service manual** section.

Projector lens calculator tool

Use Christie's projector lens calculator tool to calculate the lens, the throw distance, or your projected image/screen dimensions.

To learn more and use the tool, go to *https://projection-calculator.christiedigital.com/*.

Viewing Christie University product training videos

Christie University provides select product training videos that are helpful for understanding and using your product.

To view the available videos for your product:

1. Go to Christie University: *https://training.christiedigital.com*.
2. Select **I'm a Christie partner or customer**.
3. Log into your profile.
4. Select **Catalog**.
5. Select **Videos**.
6. Select **Product Training Videos**.
7. Navigate to the folder for your product.

Contact your dealer

Record the information about your projector and keep this information with your records to assist with the servicing of your projector. If you encounter a problem with your Christie projector, contact your dealer.

Purchase record
Dealer:
Dealer or Christie Sales/Service contact phone number:
Projector serial number: The serial number can be found on the license label located on the display panel
Purchase date:
Installation date:

Ethernet settings	
Default gateway:	
Projector IP address:	
Subnet mask:	

Copyright © 2026 Christie Digital Systems USA, Inc. All rights reserved.
If printing, consider using recycled paper and recycle this document after use.

Technical support

Technical support for Christie Enterprise products is available at:

- North and South America: +1-800-221-8025 or *Support.Americas@christiedigital.com*
- Europe, Middle East, and Africa: +44 (0) 1189 778111 or *Support.EMEA@christiedigital.com*
- Asia Pacific (*support.apac@christiedigital.com*):
  - China: +86 10 6561 0240 or *tech-supportChina@christiedigital.com*
  - India: +91 (80) 6708 9999 or *tech-India@christiedigital.com*
  - Japan: 81-3-3599-7481
  - Singapore: +65 6877-8737 or *tech-Singapore@christiedigital.com*
  - South Korea: +82 2 702 1601 or *tech-Korea@christiedigital.com*

Copyright © 2026 Christie Digital Systems USA, Inc. All rights reserved.
If printing, consider using recycled paper and recycle this document after use.

Installation and setup

Learn how to install, connect, and optimize the projector display.

Site requirements

To safely install and operate the Christie Griffyn® Series projectors, the installation location must meet these minimum requirements.

Physical operating environment

- Ambient temperature (operating) 5 to 40°C (41 to 104°F) up to 457.2 meters (1,500 feet)
- Humidity (non-condensing) 10% to 80%
- Operating altitude 0 to 3000 meters (0 to 9843 feet)

Non-operating environment (in shipping packaging)

- Ambient temperature (operating) -25 to 70°C (-13 to 158°F)
- Humidity (non-condensing) 10% to 80%

Product ventilation

Sufficient ventilation is required around the projector to regulate the temperature of the internal laser module.

The installation site must provide an airflow 450 cubic feet per minute (CFM) at 1 to 1000 meters (3.3 to 3280.8 feet) elevation, and must accommodate a heat load of 3000 W.

For each additional 1000 meters (3,280.8 feet) above sea level, increase the airflow (CFM) value by 15%. If the increased airflow requirements cannot be met by the building's HVAC system, the operating temperature range is restricted to 5 to 25°C (41 to 77°F) at a maximum altitude of 3000 meters (9,843 feet).

Power connection

Connect to AC power using the power cord provided with the projector.

This product is suitable for connection to an IT power distribution system.

Copyright © 2026 Christie Digital Systems USA, Inc. All rights reserved.
If printing, consider using recycled paper and recycle this document after use.

Power requirements

Learn the power requirements for Christie Griffyn® Series.

Griffyn® 4K32-RGB

Parameter	Requirement
Rated voltage	200-240 VAC single phase
Rated current	13 A maximum
Line frequency	50/60 Hz
Maximum power draw	2600 W
Power connector	IEC-60320 C20 inlet

Griffyn® 4K35-RGB

Parameter	Requirement
Rated voltage	100-120 VAC limited power mode 200-240 VAC full power mode
Rated current	12A maximum limited power mode 14A maximum full power mode
Line frequency	50/60 Hz
Maximum power draw	1200W limited power mode 2800W full power mode
Power connector	IEC-60320 C20 inlet

Griffyn® 4K50-RGB

Parameter	Requirement
Rated voltage	100-120 VAC limited power mode 200-240 VAC full power mode
Rated current	12A maximum limited power mode 19A maximum full power mode
Line frequency	50/60 Hz
Maximum power draw	1200W limited power mode 3800W full power mode
Power connector	IEC-C60309 30A inlet

Copyright © 2026 Christie Digital Systems USA, Inc. All rights reserved.
If printing, consider using recycled paper and recycle this document after use.

Best practices when installing a projector

Christie recommends the following best practices when installing Christie Griffyn® Series projectors.

- Download and use the most recent version of the installation and setup guide for your projector from the Christie website.
- Review all available courses on Christie University pertaining to your projector model or safety information.
- Make sure the required tools are available.
- Partially thread screws into their holes to ensure they are properly aligned and positioned but do not fully tighten until all screws are in place.
- Use high caliber cables to ensure the quality of the content (signals). Poor quality cables can affect the performance of the cable and quality of the video.
- Make sure cables are properly strain relieved so they do not apply unnecessary force on the board connectors.
- Let the projector and its components acclimatize to the installation environment.
- Update software when new software updates are available.
  For details, see the *Christie TruLife+ User Guide (P/N: 020-103315-XX)*.

Required tools

Make sure the following tools are available during the installation.

- 12 inch screwdrivers: Phillips #2 (magnetic) and flat
- 2.5 mm, 3 mm, and 5 mm hex drivers (provided with the projector)
- Adjustable wrench
- Step stool
- Powder-free N-DEX gloves
- Clean dry air (CDA)

Preparing the installation site

Make sure the installation area is ready for the components.

1. Clear the installation area.
2. Post laser hazard warning signs at all entry doors.
3. Let the projector and its components acclimatize to the installation environment.
4. Place each component near its installation location.
5. Make sure the required tools are available.

Copyright © 2026 Christie Digital Systems USA, Inc. All rights reserved.
If printing, consider using recycled paper and recycle this document after use.

Lifting and positioning the projector

Safely lift and position the projector in the location where it will be used.

Warning! If not avoided, the following could result in death or serious injury.

- Do not install or operate the projector in any position that does not meet the stated product specifications for alignment and orientation.
- Do not stack more than two projectors in landscape orientation.

1. If stacking the projector, make sure the bottom projector is level by adjusting the roll of the lens axis to ensure the stability of the stack.

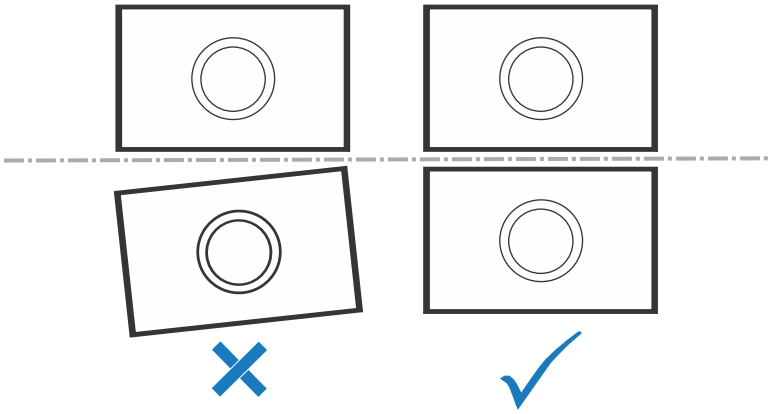

2. Position the projector so it is centered and parallel with the screen.

   If space is limited, aim the projector slightly off-center and use lens offset to center the image on the screen.

Copyright © 2026 Christie Digital Systems USA, Inc. All rights reserved.
If printing, consider using recycled paper and recycle this document after use.

Projector sides

While positioned behind the projector and facing towards the screen, the right side (A) of the projector is on the right and the left side (B) is on the left.

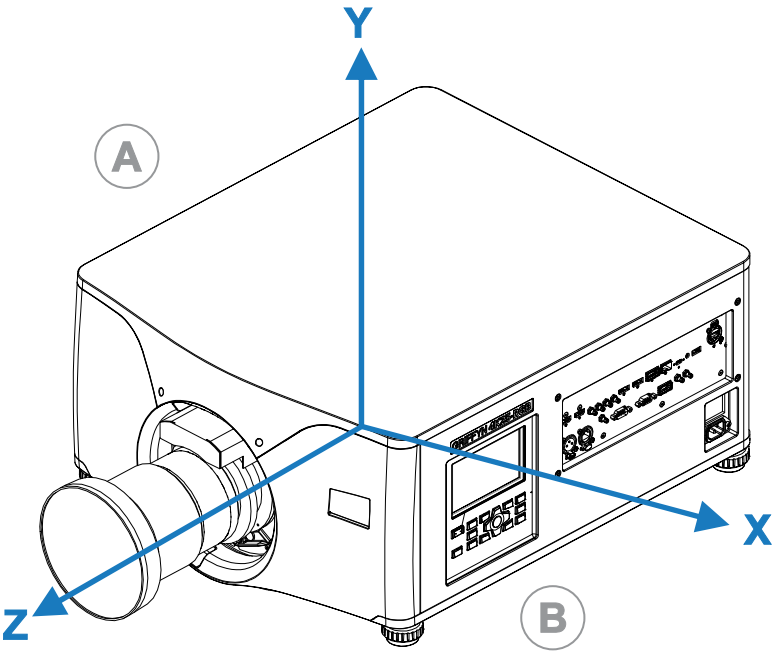

- Z-direction: projection axis originates at the center of the image plane
- X-direction: horizontal left/right with respect to the image plane
- Y-direction: vertical up/down with respect to the image plane

Leveling the projector

Use the projector feet to level the projector.

1. To adjust the vertical position of the projector, extend or retract the adjustable feet on the bottom of the projector using the adjustable knobs on the feet.

   Christie recommends adjusting the feet from the side or rear of the projector and not the front to avoid exposure to the output light.

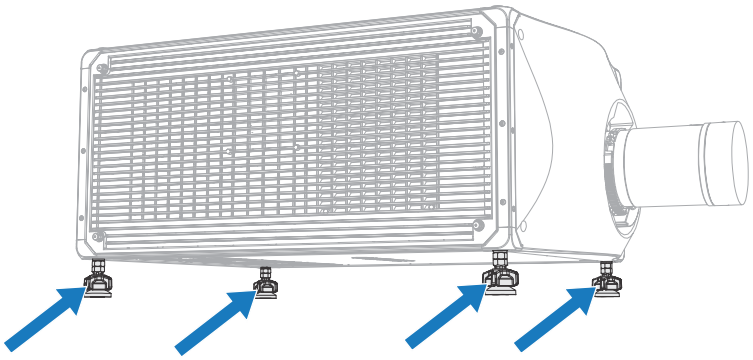

Copyright © 2026 Christie Digital Systems USA, Inc. All rights reserved.
If printing, consider using recycled paper and recycle this document after use.

The projector feet are removable and can be moved to the top of the projector to run in an inverted orientation.

2. Once the required adjustment is made, using a wrench, tighten the lock nut against the bottom of the projector.

Installing the projector lens

Only use lenses designed for Christie Griffyn® Series projectors. Installing a lens not designed for Christie Griffyn® Series, results in a warning that the lens is not present.

1. Turn off the lasers.
2. Remove the lens caps from the lens.
3. Align the guides on the front cover and the lens marked by a red line.

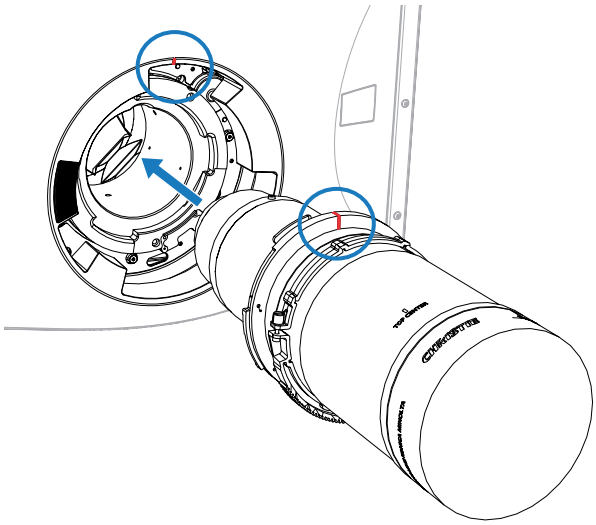

4. Insert the lens into the projector and turn it clockwise until two clicks sound.

   The first click indicates the safety lock mechanism has been engaged.
5. Continue to turn the lens clockwise until a second click sounds.

   The second click indicates the lens is fully locked in position. The top center label should face up and be aligned to the lens guide on the front cover.

Copyright © 2026 Christie Digital Systems USA, Inc. All rights reserved.
If printing, consider using recycled paper and recycle this document after use.

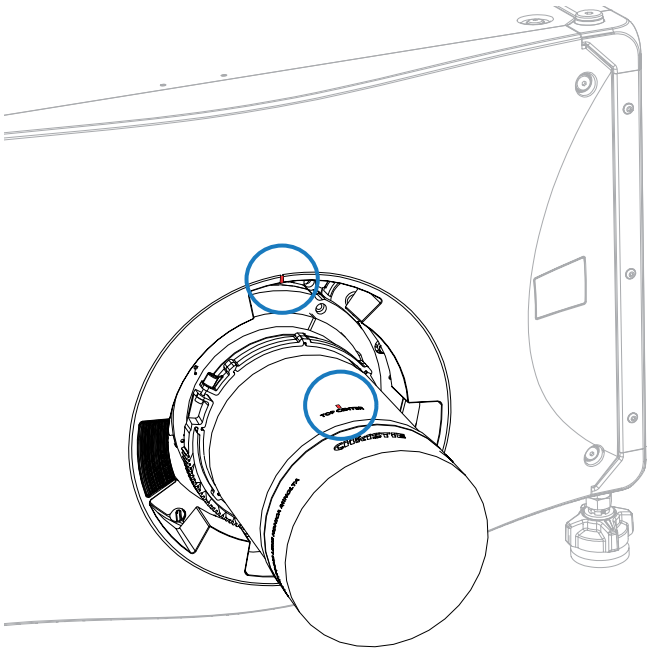

6. After installing a new lens in the projector:
   - *Adjust boresight* (on page 51).
   - *Perform electronic convergence* (on page 63).

Calibrating the lens motor

Make sure the lens motor is calibrated before using the projector.

If the lens motors are not calibrated properly, implications may include:

- Incorrect reporting of the lens motor position.
- Inability to use the full range of the lens motors.
- Lens motors traveling outside of the pre-defined keep-out area.
- Damage to the projector.

Calibrate the lens motors when any of the following conditions are met:

- After a lens change.
- After the projector is moved and/or jostled.
- After any manual adjustment is made to the zoom or focus.

To calibrate the lens:

1. Select **MENU** > **Configuration** > **Lens Settings** > **Lens Calibration**.
2. Select **Enter**.

Removing the projection lens

Use the correct method of removing the lens.

1. Turn off the lasers.

Copyright © 2026 Christie Digital Systems USA, Inc. All rights reserved.
If printing, consider using recycled paper and recycle this document after use.

2. Push in and hold the lens release button.

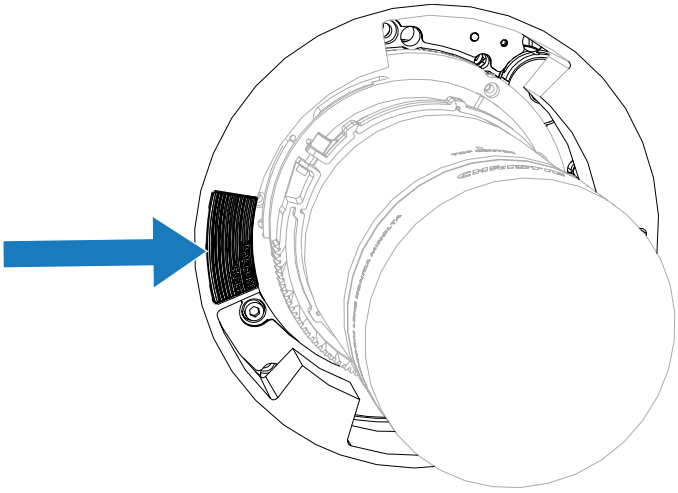

3. Turn the lens counterclockwise until the lens guides are aligned.
4. Slide the lens straight out of the projector.

   If the lens does not slide out easily, reset the lens offset before removing the lens.
5. Attach the lens cap to avoid damage.

Warning! If not avoided, the following could result in death or serious injury.

- Once lens removal has begun, the safety retention features of the lens are defeated. To re-engage the safety lock mechanism, remove and re-insert the lens, or fully rotate the lens clockwise until a click sounds.
- Use packaging tape to ensure the safe shipment of the projection lens to restrain the zoom ring from rotating during shipping.

Installing the ultra short throw projector lens

Learn how to install the ultra short throw projection lens.

When using the ultra short throw lens and switching between dark and bright content, focus drift can occur. To help to mitigate this issue, Christie recommends reducing brightness and focusing the content on what you primarily want the projector to focus on, or creating different profiles for the dark and light content.

The illustrations in this document are for representation only and may not depict your model exactly.

1. Switch to the ultra short throw lens keep-out area.
   a) Select **MENU** > **Configuration** > **Lens Settings**.
   b) Select **Enable UST Lens (0.38:1)**.
   c) To enable the ultra short throw lens keep-out area, select **Enter**.

   Not switching to this keep-out area risks damaging the projector when the ultra short throw lens is installed.
2. Turn off the lasers.
3. Remove the lens caps from the lens.

Copyright © 2026 Christie Digital Systems USA, Inc. All rights reserved.
If printing, consider using recycled paper and recycle this document after use.

4. Align both the guide on the front cover and the lens marked by a red line, and the insert plates on the lens.
5. Insert the lens into the projector and turn it clockwise until it is locked in place.

   Make sure the lens is supported near the front element.

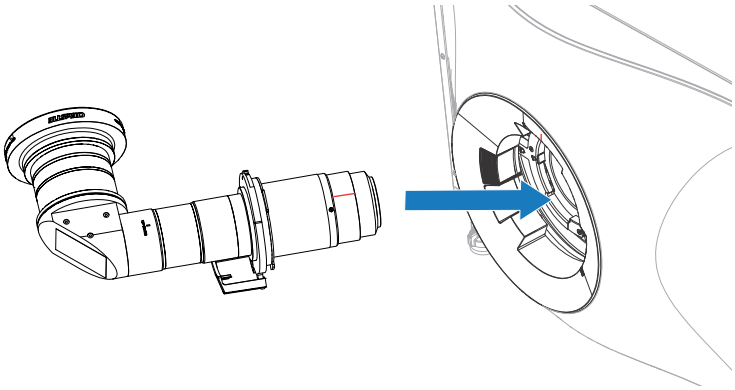

Aligning and focusing the image (ultra short throw lens)

After installing the lens, align and focus the image.

The method for performing the steps below may vary depending on projector model. For detailed information, refer to the user documentation for your product.

1. If required, power on the projector.
2. Perform a lens calibration.
3. To align the image, position the projector and adjust offsets.
4. Adjust boresight.
5. Adjust the center focus of the image by using the Focus feature on the projector.
6. Manually adjust the corner focus of the image using the focus ring on the lens.

Copyright © 2026 Christie Digital Systems USA, Inc. All rights reserved.
If printing, consider using recycled paper and recycle this document after use.

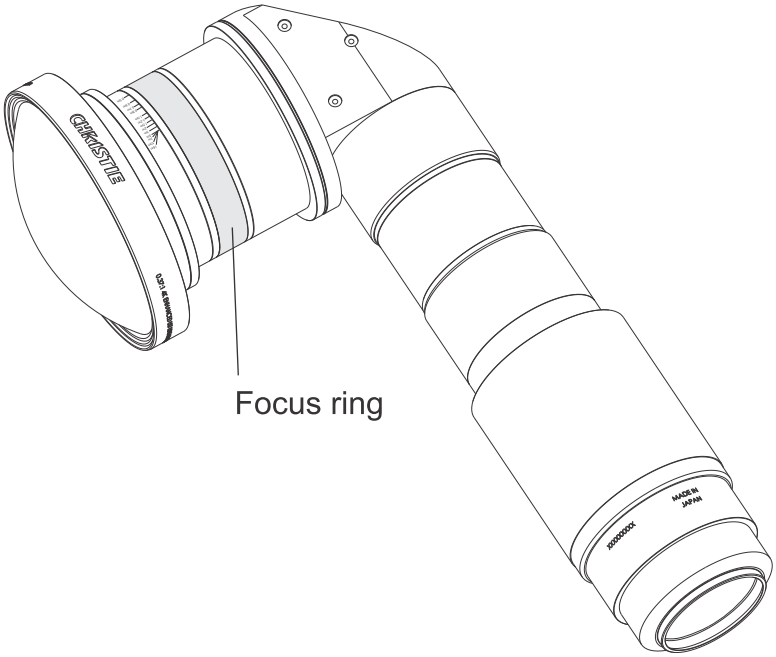

7. To fine tune the focus, repeat steps 5 and 6 until optimum focus is achieved.

Turning on the projector

When the projector AC power supply is plugged in and the breaker switch is on, the power is on.

Warning! If not avoided, the following could result in death or serious injury.

- SHOCK HAZARD! Do not attempt operation if the AC supply is not within the specified voltage and current, as specified on the license label.

1. Plug the projector into AC power and to make sure AC power cord does not fall out, pull down the safety latch and lock in place.
2. Turn on the breaker switch.

   When plugged in and the breaker switch is on, the projector automatically powers on to standby mode within 60 seconds. The display panel functionality becomes available.
3. To turn on the light source using the projector keypad, select and hold the **Power** button until a beep sounds.

   To turn on the light source using the remote, select and hold the **ON** button until a beep sounds.

Projector LED status indicators

Identify the LED state colors and meaning.

LED	State		Description
Blue	Solid	Standby	Light source is off. Video electronics are off. Projector status is OK.

Copyright © 2026 Christie Digital Systems USA, Inc. All rights reserved.
If printing, consider using recycled paper and recycle this document after use.

LED	State		Description
	Flashing	Cool down	Projector is moving to one of the two standby states: • Light source is off and video electronics are booting up. • Light source is off. Video electronics and light source is cooling down.
Green	Solid	Light source on	Light source is on. Projector status is OK.
	Flashing	Startup	Projector is moving to light source on state. Light source is warming up. Video electronics are initializing.
Yellow	Solid	Warning in standby	Projector is in standby state. A problem exists with the projector that does not prevent it from operating.
	Flashing yellow/green	Warning during startup	Projector is in a startup state. A problem exists with the projector that does not prevent it from operating.
	Flashing	Warning with light source on	Light source is on. A problem exists with the projector that will not cause it to shut down.
	Flashing yellow/blue	Warning during cool down	Projector is in a cool down state. Light source is off. Video electronics and light source are cooling down. A problem exists with the projector that does not prevent it from operating.
Red	Solid	Error in standby	Projector is in standby. An error exists that prevents the projector from starting up.
	Flashing	Error	An error with the projector exists during startup, cool down, or when the light source is off. Projector will proceed to shut down.
Off		AC off	The AC power is off.

Projector LED shutter indicators

Identify the shutter LED state colors and meaning.

LED	State	Description
Solid magenta	Shutter closed	The shutter is closed. In standby, the shutter is always automatically closed and the magenta light is muted.
Off	Shutter open	The shutter is open.

Copyright © 2026 Christie Digital Systems USA, Inc. All rights reserved.
If printing, consider using recycled paper and recycle this document after use.

Turning off the projector

When powering off in preparation for inspection or maintenance, always disconnect from AC.

1. To turn off the light source using the projector keypad, select and hold the **Power** button until a beep sounds.

   To turn off the light source using the remote, select and hold the **OFF** button until a beep sounds.

   When powering off the projector, allow the projector to complete its cool down cycle. Do not immediately unplug the projector.
2. To turn off power to the projector, turn off the projector breaker switch and wait 10 seconds for the electrical charge to dissipate.
3. Disconnect the power supply cord.

Checking for the latest software version

Note the version of the software on the projector and check the Christie website to see if a newer version of the software has been released. If a newer version has been released, upgrade the software. For details on updating the software, see the *Christie TruLife+ User Guide (P/N: 020-103315-XX)*.

Keeping the projector updated with the latest software version ensures access to the latest features and optimal performance abilities.

Disposing of the product packaging

Once the product has been installed and set up, Christie recommends reusing or recycling the product packaging according to your local regulations.

Completing the installation checklist

Complete the provided installation checklist (P/N: 020-103137-XX) and return it to Christie.

Copyright © 2026 Christie Digital Systems USA, Inc. All rights reserved.
If printing, consider using recycled paper and recycle this document after use.

Aligning the image

Only perform image alignment after the projector is fully assembled and powered up in its final location.

Basic image alignment ensures the image reflected from the DMDs is parallel and well-centered with the lens and screen. This initial optical alignment is the foundation for optimizing images on the screen and must be completed before final boresight adjustments. Before beginning, make sure the projector is properly positioned in relation to the screen.

1. Make sure the projector is positioned in the throw distance range for the particular lens.
2. Display a test pattern.
3. Do a quick preliminary focus and (if available) zoom adjustment with the primary lens.

   Do not worry about consistency across the image at this point, just center focus. It is good practice to have zoom adjustment and focus adjustment in the center of its range.
4. Holding a piece of paper at the lens surface, adjust offsets as necessary until the image is centered within the lens perimeter. A full black field works best for this.
5. If the projector is mounted off center to the screen axis, offset the lens as much as required. Aim the projector over slightly towards the center of the screen, but use caution when doing so, as too much tilt causes excessive keystone distortion.
6. With a framing pattern on screen, double-check projector leveling so the top edge of the image is parallel to the top edge of the screen.

Adjusting offset

Adjust the offset to align the image on the screen. Always adjust offset before adjusting boresight.

For the best optical performance and minimal keystone, use offsets instead of aiming at the center of the image, in off-axis installations. Avoid extreme tilts or offsets. Corner vignettes on a white test pattern indicate extreme offset that should be avoided using mechanical alignment.

1. Project an image with the primary lens.
2. Select a framing test pattern.
3. Select **LENS OFFSET**.

   You can also select **MENU** > **Configuration** > **Lens Settings** > **Lens Offset**.
4. Use the arrows to adjust the offset to display a square image on the screen, with minimal projector aiming error.
5. To exit to the home page, select **Back**.

Resetting the lens to home position

Realign the lens to the home position after the lens has been offset and out of alignment.

1. Select **LENS OFFSET**.

Copyright © 2026 Christie Digital Systems USA, Inc. All rights reserved.
If printing, consider using recycled paper and recycle this document after use.

You can also select **MENU** > **Configuration** > **Lens Settings** > **Lens Offset**.

2. To reset the lens to the default home position, select **Enter**.
3. To confirm the reset, select **OK**.

Selecting a test pattern

Many test patterns are available to assist with the configuration of the projector and to diagnose any issues that may occur.

1. From the display panel, use the arrows to select **Test Pattern**.

   You can also select the test patterns from **MENU** > **Test Pattern** or selecting **Test Pattern** on the IR remote.
2. Scroll through the list of test patterns.
3. Select the required test pattern.
4. To confirm your selection, select **Enter**.

Adjusting boresight

The boresight adjustment balances the tilt of the lens mount to compensate for screen-to-projector tilt.

Caution! If not avoided, the following could result in minor or moderate injury.

- Do not look directly into the lens when the light source is on. The extreme high brightness can cause permanent eye damage.

If doing excessive boresight adjustment, it may make the lens keep-out zones smaller.

1. Close the shutter on the projector.
2. Unlock the three lens mount stabilization screws.

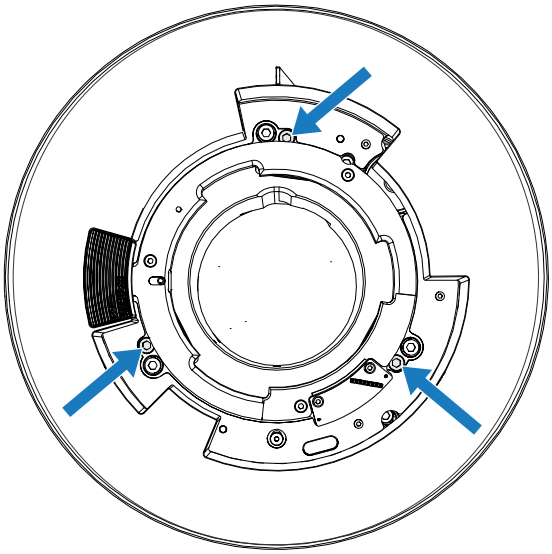

Copyright © 2026 Christie Digital Systems USA, Inc. All rights reserved.
If printing, consider using recycled paper and recycle this document after use.

3. Open the shutter.
4. From the Test Pattern menu, select the **Boresight** test pattern.

   The Boresight test pattern assists with adjusting the boresight for the three focus points.

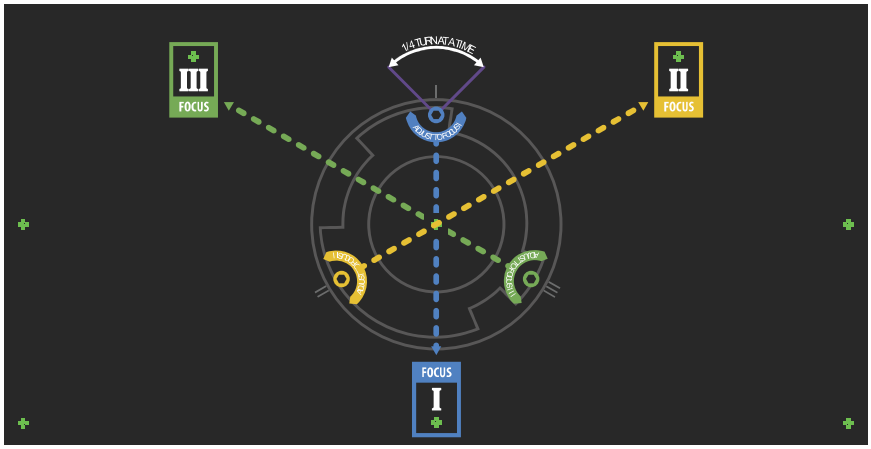

5. To focus the bottom boresight guide, adjust the blue boresight screw.

   Adjust the screw 1/4 turn. If you get to the end, further unlock the corresponding stabilization screw.

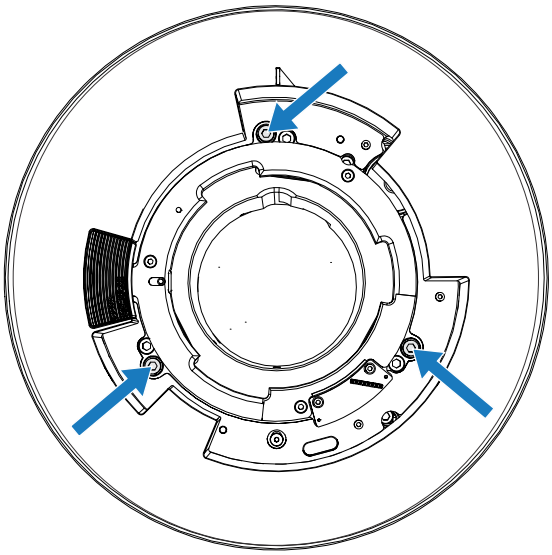

6. To focus the top boresight guide, adjust the blue boresight screw.

   Adjust the screw 1/4 turn. If you get to the end, further unlock the corresponding stabilization screw.
7. To focus the right boresight guide, adjust the green boresight screw.
8. To focus the left boresight guide, adjust the yellow boresight screw.
9. To continue to refine the focus, repeat steps 5 to 7.
10. To approximately recover the original factory boresight, position the three stabilization screws flush with the front face of the lens mount plate and in contact with the inner lens mount plate.

    This may require adjusting both stabilization and adjustment screws.
11. Once the focus is refined, close the shutter.

Copyright © 2026 Christie Digital Systems USA, Inc. All rights reserved.
If printing, consider using recycled paper and recycle this document after use.

12. To maintain the adjustments, lock the stabilization screws.

    When locking the screws, start with the top stabilization screw and turn it so it just touches the base. Repeat for the other two stabilization screws. Continue to adjust the locking screws until they are tight.

13. Open the shutter.

Optimizing the integrator zoom and focus

Learn how to optimize the integrator zoom and focus.

These instructions must be performed after replacing a light engine, fold mirror, integrator rod, relay optics, and zoom/focus assembly or when doing preventative maintenance.

Notice. If not avoided, the following could result in property damage.

- Optimizing the integrator zoom is a critical adjustment because if the zoom is not set properly, it results in lower brightness on screen and the DMD and other components may be damaged.

1. Turn off the projector and disconnect it from AC power.
2. Open the Service door on the side of the projector.
3. Remove the zoom and focus cover and rotate it out of the way.
4. Unlock the Zoom and Focus paddles by loosening the hex screw in the image below.

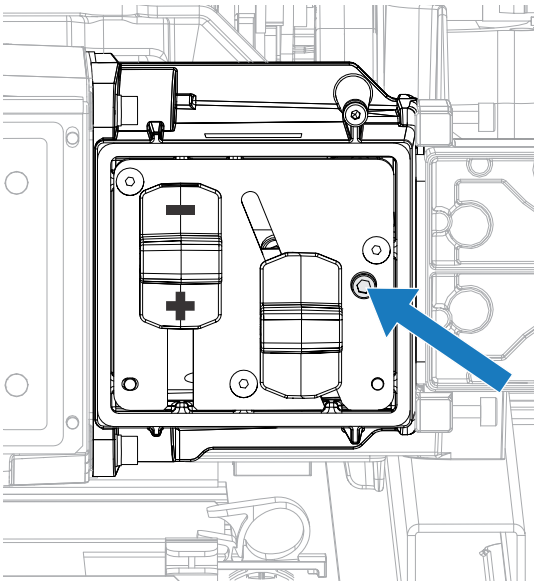

5. Adjust the Zoom paddle (A in the image below) to minimum zoom (B in the image below) and the Focus paddle (C in the image below) to the opposite position.

Copyright © 2026 Christie Digital Systems USA, Inc. All rights reserved.
If printing, consider using recycled paper and recycle this document after use.

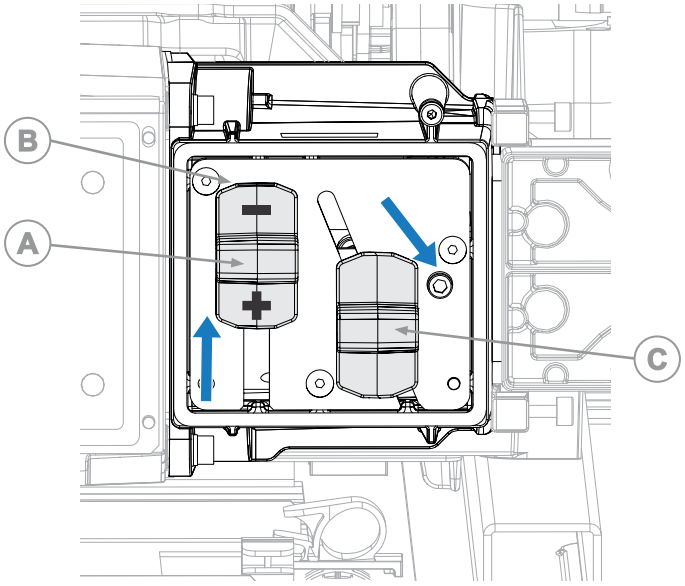

6. Power on the projector to Standby mode.
7. Enable Maintenance mode before powering on the projector into full power mode.
   a) From the display panel, select **MENU** > **Admin** > **Service**.
   b) Enter the service password.
   c) Select **Light & Output Settings** > **Enable Maintenance Mode**.
   d) To enable safe, low illumination settings, select **Enter**.

   Enabling Maintenance mode presets safe, low illumination settings before making optical adjustments. When enabled, Maintenance mode disables LiteLOC™ and sets a low level setpoint for the red/green/blue laser manual slider controls.
8. Power on the lasers.
9. From the Test Pattern menu, select the **Integrator Rod** test pattern.

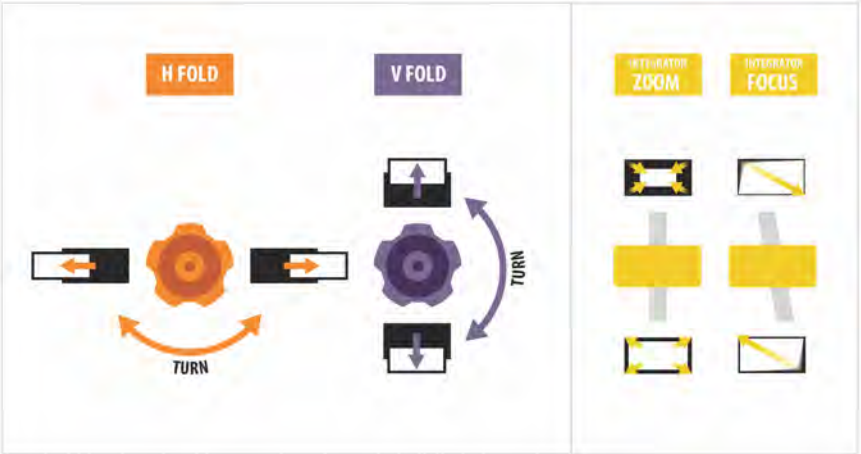

10. Make sure the image is focused (projection lens focus) and there is no vignetting.
11. Loosen the locking screw for the fold mirror adjustment knobs.

Copyright © 2026 Christie Digital Systems USA, Inc. All rights reserved.
If printing, consider using recycled paper and recycle this document after use.

12. Unlock the fold mirror and use it to move the projected image to the right and down to see the left and top of the white projection.

    Your image should look like the following, which has a softer/defocused edge:

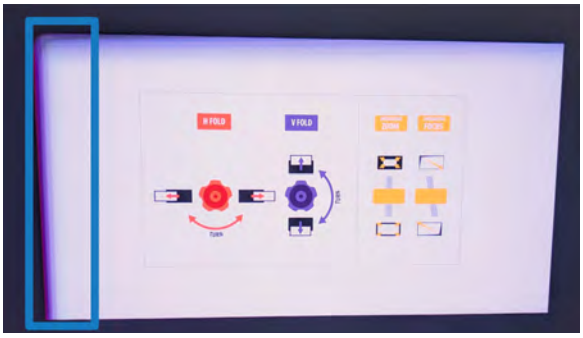

13. Adjust the integrator focus to get an optimal focus on the left side of the white image.

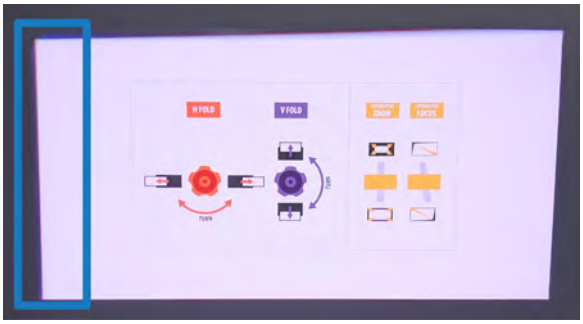

14. Once optimal focus is set for the left white edge, using the fold mirror horizontal knob move the white light to the left and up so the bottom and right side of the white image can be seen clearly.

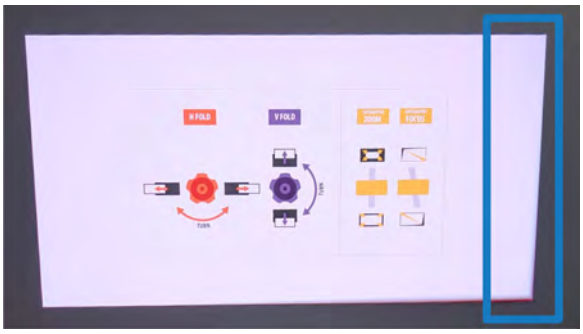

15. Note the Focus paddle position as it will help later with balancing and then adjust the Focus paddle position to improve focus

    This is a balancing act as the focus movements defocus the previously aligned top left corner.

Copyright © 2026 Christie Digital Systems USA, Inc. All rights reserved.
If printing, consider using recycled paper and recycle this document after use.

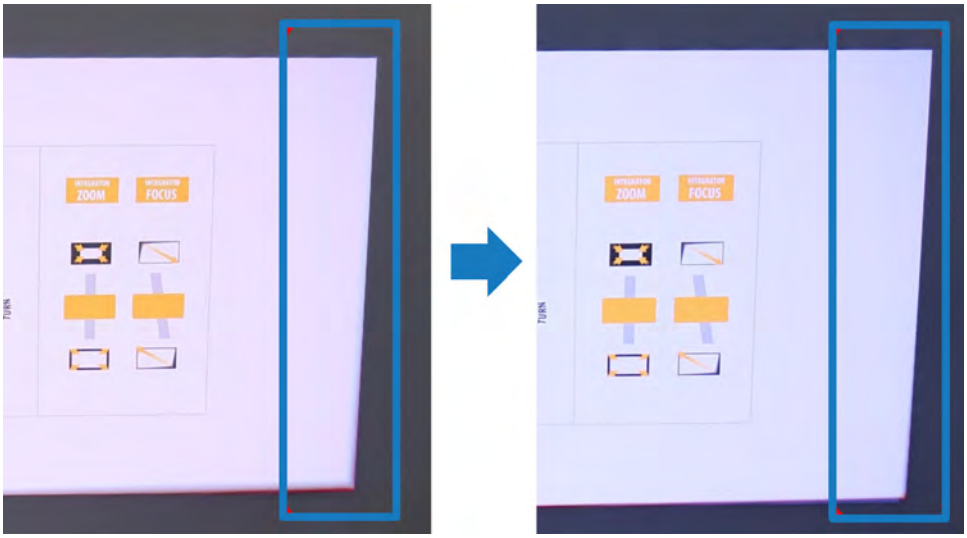

16. Repeat steps 12 to 15 so the top-left and bottom-right of the image have the best balance of focus on the right and left sides of the white field.
17. When top-left and bottom-right of the image have an optimal focus balance, use the fold mirrors to move the image to the center of the screen.
18. Review the top-left corner and bottom-right corner for shadows.

    There may be some shadows visible as the Zoom paddle is still set to Minimum.

19. If shadows are present at the corners of the image, increase the zoom slightly by lowing the Zoom paddle (recommended 1 to 2 mm)

    If the Zoom paddle was adjusted, the focus also needs readjustment.
20. Repeat steps 12 to 19 to refocus and center the image again until no shadows are visible at the edges of the image.

    When complete, the Zoom paddle should be relatively close to the minimum zoom position.

Copyright © 2026 Christie Digital Systems USA, Inc. All rights reserved.
If printing, consider using recycled paper and recycle this document after use.

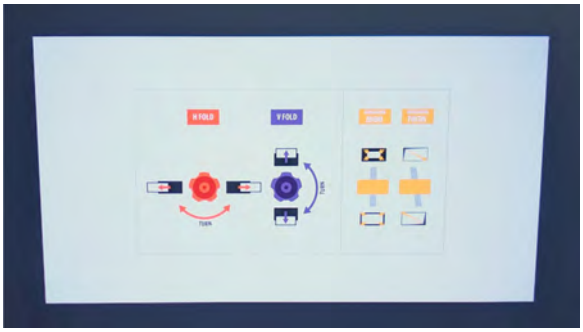

21. To verify the zoom and focus are optimized, use the fold mirror to move the white field left, right, up, and down.

    When doing the verification on a perfectly zoomed image, minimal adjustments should show shadows on screen. If turning the fold mirror knobs more than a little and no shadows exist, it implies that the integrator is over zoomed.

22. When complete, center the white field with the optimal zoom.
23. Lock the Zoom and Focus paddles and the fold mirror.
24. Re-install the zoom and focus cover.

The locking mechanism can sometimes shift the alignment. Hold the adjustment knob and re-adjust the alignment while tightening the lock.

Adjusting the fold mirror

Fold mirror adjustment must be completed by trained personnel.

Notice. If not avoided, the following could result in property damage.

- Misalignment of the fold mirror may cause permanent damage to the product.

1. Set the brightness to 30% or less before powering on the projector.

   If the Brightness slider is greyed out, enable LiteLOC™.

2. From the Test Pattern menu, select the **Integrator Rod** test pattern.

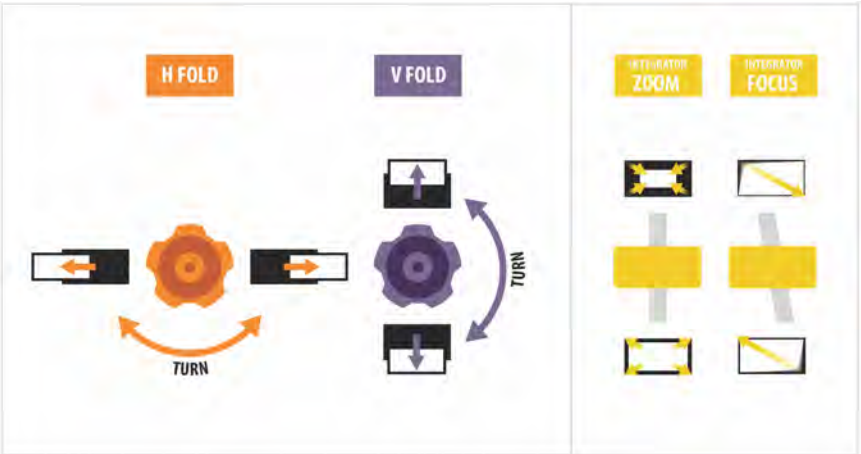

3. Open the Service door on the side of the projector.

Copyright © 2026 Christie Digital Systems USA, Inc. All rights reserved.
If printing, consider using recycled paper and recycle this document after use.

4. Unlock the fold mirror screws to unlock the adjustment knobs.

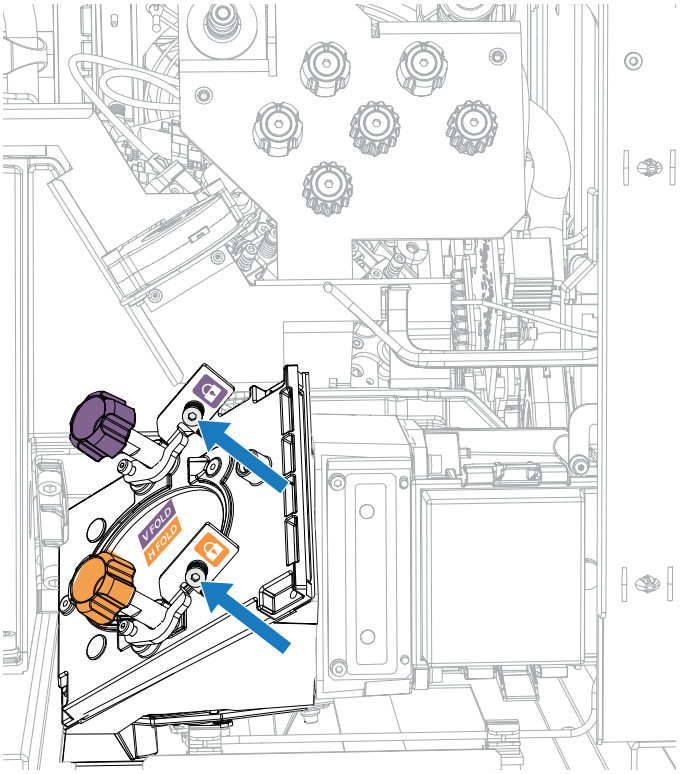

5. To make horizontal adjustments, use the orange knob labeled Horizontal.
6. To make vertical adjustments, use the purple knob labeled Vertical.

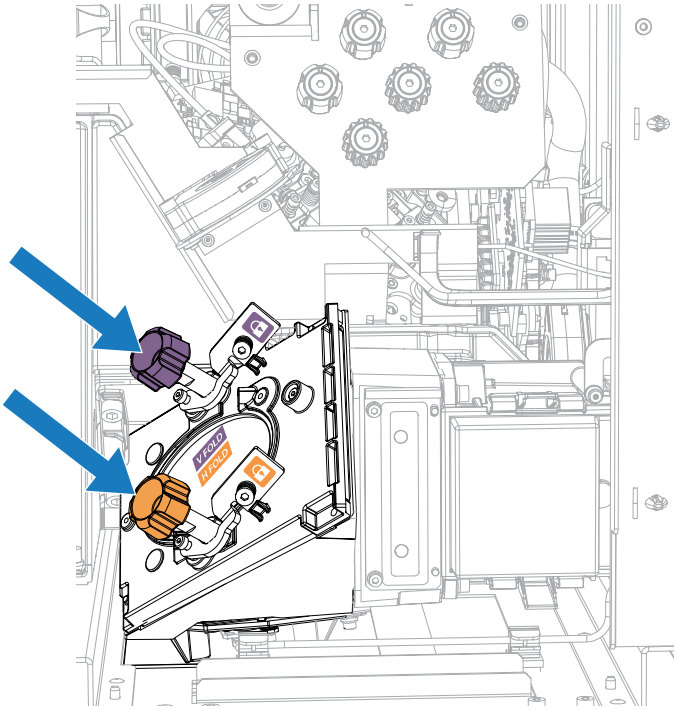

Copyright © 2026 Christie Digital Systems USA, Inc. All rights reserved.
If printing, consider using recycled paper and recycle this document after use.

7. To continue to refine the fold mirror adjustment, repeat the horizontal and vertical adjustments.
8. Recenter the image to inspect for shadows at the top-left and bottom-right corners.
9. Lock the fold mirror screw to lock the adjustment knobs.
10. Once satisfied with the alignment, increase the projector power.

Aligning the image with lens zoom and focus

The lens zoom and focus adjustment allows the projected image to be focused and shifted to align with the screen.

1. Display an image or test pattern that can be used to analyze image focus and geometry.
2. Select **ZOOM**.
3. Use the up and down arrows to zoom in or out of the image.
4. To exit, select **Back**.
5. Select **FOCUS**.
6. Use the up and down arrows to adjust the focus of the image.
7. To exit, select **Back**.
8. To refine your adjusts, repeat steps 2 to 7.

Adjusting digital micromirror device (DMD) convergence

A convergence problem occurs when one or more projected colors (red, green, and blue) appears misaligned when examined with a convergence test pattern.

Two features can be used independently or in conjunction to adjust convergence: electronic (with the remote or through the menu) and/or mechanical.

When adjusting the convergence, you are adjusting red and green to blue for mechanical convergence. For electronic convergence all three colors can be adjusted. Always align the color components of the sprite to the inner most line color (for each axis). The three colors should overlap to form pure white lines throughout the image and one or more poorly converged individual colors may appear adjacent to some or all of the lines.

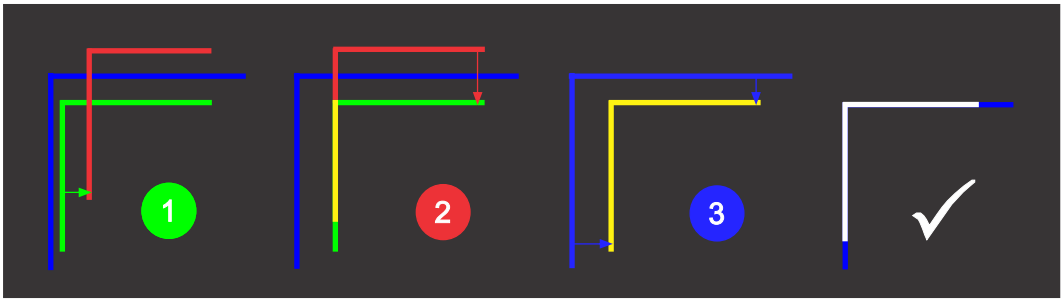

For best convergence results, Christie recommends disabling all geometry and color (set the color correction mode to **Max Drive**) correction before adjusting convergence.

Copyright © 2026 Christie Digital Systems USA, Inc. All rights reserved.
If printing, consider using recycled paper and recycle this document after use.

If you wear glasses with corrective lenses when performing this adjustment, make sure you are viewing the test pattern on a straight angle through the optical axis of your glasses, and not from a tilted or angled perspective. This avoids a prismatic effect that can appear to shift convergence when viewing at an angle.

Mechanically adjusting convergence

Use the convergence knobs behind the Service door to mechanically adjust convergence.

1. Before adjusting digital micromirror device (DMD) convergence, make sure the projector has reached a steady operational state. If switching from a white or bright test pattern to a dark convergence test pattern, or if warming up the projector after a shutdown, allow 15 minutes for stabilization so the optics can reach a steady state.
2. Make sure electronic convergence has been reset to zero prior to conducting mechanical convergence.
3. From the Test Pattern menu, select the **Convergence** test pattern and display it full screen.

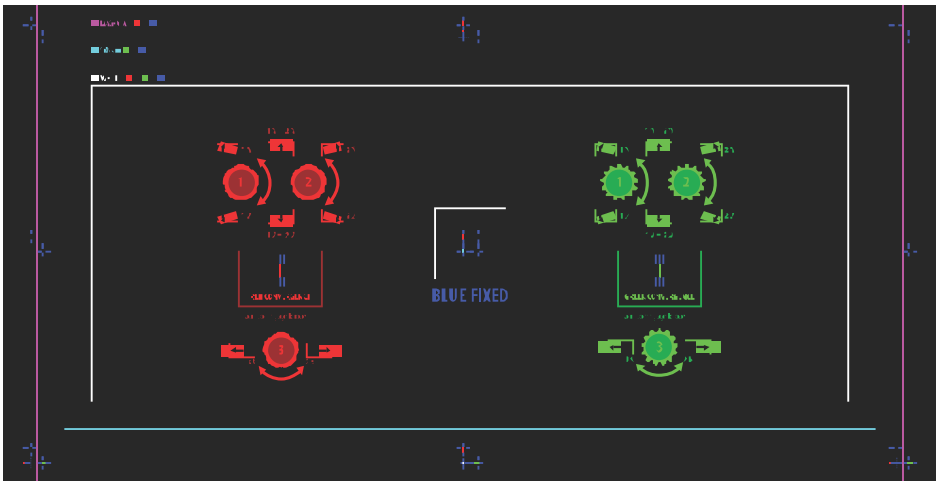

4. Open the Service door on the side of the projector.
5. To adjust the convergence knobs, use the 3 mm driver included with the projector.

   If adjusting by hand without using the tool, pull out the convergence adjustment knobs to engage them.

Copyright © 2026 Christie Digital Systems USA, Inc. All rights reserved.
If printing, consider using recycled paper and recycle this document after use.

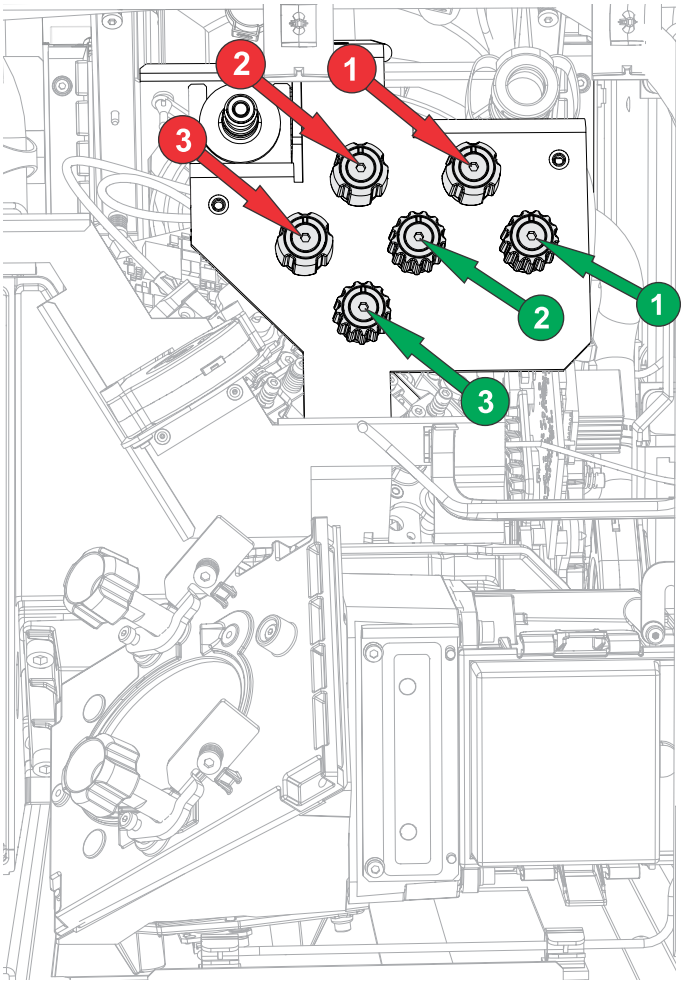

6. Use the Convergence test pattern to assist with adjusting the horizontal and vertical lines.

   Horizontal adjustments are controlled by adjusting knob 3.

   Vertical convergence and rotation are controlled by adjusting knobs 1 and 2. Christie recommends rotating a single knob a maximum of a quarter rotation before adjusting the second knob a quarter rotation. For example, if using one hand, turn the left knob a quarter rotation and then the right knob a quarter rotation, and so on. Adjusting a single knob for vertical or rotational adjustment to an extreme before adjusting the second knob may result in the convergence mechanism binding.

   For the best stability, Christie recommends setting convergence while rotating the knobs in a clockwise direction. This may require first adjusting convergence by turning the knobs counter-clockwise, and finalizing the convergence with a clockwise approach. This applies to all knobs.

7. When complete, push in all the convergence adjustment knobs to disengage them.

Electronically adjusting convergence with the remote

Use the electronic convergence feature with the remote to adjust convergence.

If warping with Christie Twist™ or Mystique™, make sure the warp files are disabled before entering the electronic convergence feature.

Copyright © 2026 Christie Digital Systems USA, Inc. All rights reserved.
If printing, consider using recycled paper and recycle this document after use.

When using the remote to do electronic convergence, the following functionality is not available:

- Lens movement functions
- Image optimization and setting the aspect ratio
- Keystone adjustments
- Customized actions
- Context-sensitive help
- On-screen display menu

Follow these steps to adjust convergence electronically with the remote.

1. Before adjusting digital micromirror device (DMD) convergence, make sure the projector has reached a steady operational state. If switching from a white or bright test pattern to a dark convergence test pattern, or if warming up the projector after a shutdown, allow 15 minutes for stabilization so the optics can reach a steady state.
2. On the remote, select **Test Pattern** and select the **E-Convergence** test pattern.

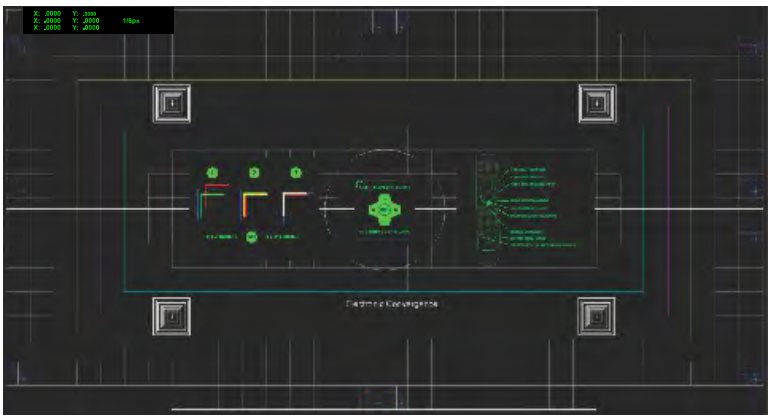

The E-Convergence test pattern is displayed, including the instructional text. To remove clutter from the screen or if familiar with the electronic convergence, turn off the instructional text. On the remote, select **OSD Hide** for two seconds.

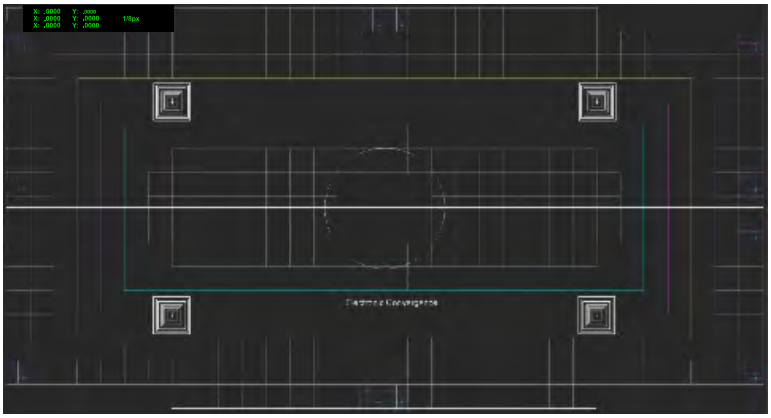

Until electronic convergence is completed, the displayed image may appear to be blurred and difficult to read, especially for white text, due to the mis-convergence of the red, green, and blue pixels.

3. Select the corner sprite you want to adjust first.

   By default the top-left position is selected.

Copyright © 2026 Christie Digital Systems USA, Inc. All rights reserved.
If printing, consider using recycled paper and recycle this document after use.

4. Lock the color component of the sprite to align the other two color components to, and then unlock one or both of the two remaining color components to adjust.

   On the remote use keys **1** (red), **2** (green), and **3** (blue) to lock and unlock the color components of the sprite.

   Always align the color components of the sprite to the inner most line color (for each axis).

   By default, all three color components (red, green, and blue) are displayed. It may be helpful to obtain a better view of the position of a particular color component if one or two of the other colors are deselected. On the remote, use keys **4** (red), **5** (green), and **6** (blue) to show or hide the color components.

5. Move the red, green, and/or blue components for the selected sprite either horizontally (x-axis) or vertically (y-axis) to align to the inner most line color.

   On the remote, use the **Up** and **Down** keys to adjust vertically on the x-axis and the **Left** and **Right** arrows to adjust horizontally on the y-axis.

   To change the step size for the adjustment, on the remote select **7** (decrease) or **9** (increase). The default is 1/8th of a pixel.

   You cannot move the selected sprite outside the resolution range.

6. Repeat steps 4 and 5 for the other axis.

7. To apply the alignments and update the test pattern (so the effect is seen on the screen), on the remote select and hold **Enter**.

   A countdown is initiated and a message displayed when the alignments are applied.

   To apply the alignments to the test pattern at any time, press and hold the **Enter** button. Applying alignments to the test pattern does not automatically save the convergence settings to the projector. For how to save the convergence to the projector, refer to step 10.

8. To adjust remaining corners, repeat steps 3 to 7.

   To move to the next corner, on the remote press **Back**. The Select Corner to Adjust dialog appears. Use the arrow keys to select the next corner you want to adjust.

9. If the corner adjustment is not what you want or to start over with the alignment, reset the sprite positions:

   a) On the remote, press **0**.

   b) To reset the selected corner's alignment, select **Selected** and select how the chosen sprite position should be reset: **Factory**, **Zero**, or **Last Saved**.

   c) To reset the alignments for all the corners, select **All** and select how the sprite positions should be reset: **Factory**, **Zero**, or **Last Saved**.

10. To save the convergence and exit, on the remote press **Test Pattern**.

    If no changes have been made, the projector exits the electronic convergence function. If any changes have been made to the convergence, a Save or Discard Changes dialog appears.

    a) To save and exit, select **SAVE** and **ENTER**.

       The convergence settings are applied and saved to the projector before exiting the electronic convergence function.

    b) To exit without saving, select **DISCARD** and **ENTER**.

       The convergence settings are not saved to the projector and the previous convergence settings are applied.

Electronically adjusting convergence through the menu

Use the electronic convergence feature in the menu to adjust convergence. It can be used in addition to or instead of mechanical digital micromirror device (DMD) convergence. When used in addition

Copyright © 2026 Christie Digital Systems USA, Inc. All rights reserved.
If printing, consider using recycled paper and recycle this document after use.

to mechanical DMD convergence, Christie recommends completing mechanical convergence prior to making electronic adjustments.

- This feature is only available on the local interface (display panel).
- If warping with Christie Twist™ or Mystique™, adjust the convergence mechanically. Do not use the electronic convergence feature.

1. Before adjusting DMD convergence, make sure the projector has reached a steady operational state. If switching from a white or bright test pattern to a dark convergence test pattern, or if warming up the projector after a shutdown, allow 15 minutes for stabilization so the optics can reach a steady state.
2. Make sure the **Convergence Enable** option is selected:
   a) From the display panel, select **MENU** > **Admin** > **Service**.
   b) Enter the service password.
   c) Select **Convergence Enable**.
3. From the Test Pattern menu, select the **E-Convergence** test pattern and display it full screen.

   Until electronic convergence is completed, the displayed image may appear to be blurred and difficult to read, especially for white text, due to the mis-convergence of the red, green, and blue pixels.

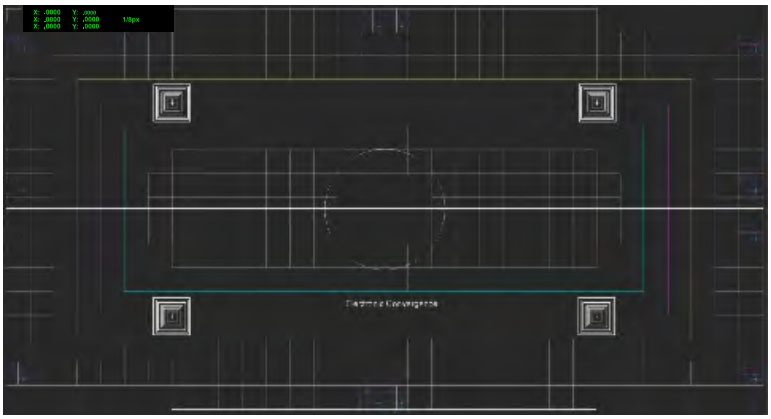

4. To access the electronic convergence menu, select **MENU** > **Admin** > **Service** > **Convergence**.
5. To show the adjustment locations, select **Show Convergence Sprite**.

   Only one adjustment position can be selected at a time.
6. From the Corner list, select the corner you want to adjust first.

   By default the top-left position is selected.
7. To select the color for adjustment, select **Color** and select the appropriate color from the list.

   By default, all three color components (red, green, and blue) are displayed.

   It may be helpful to obtain a better view of the position of a particular color component if one or two of the other colors are deselected.
8. Modify the red, green, and/or blue convergence for the selected sprite both vertically and horizontally by adjusting the sliders so all three color components are overlapped (sprite is displayed in white).

   You cannot move the selected sprite outside the resolution range.

Copyright © 2026 Christie Digital Systems USA, Inc. All rights reserved.
If printing, consider using recycled paper and recycle this document after use.

9. To adjust remaining locations, repeat steps 5 to 8.
10. To apply and store the new settings, select **Convergence Enable**.
    If already selected, clear and reselect **Convergence Enable**.
11. To reset the electronic convergence, select **Reset**.
12. At the confirmation prompt, select **Reset** and then apply and store the new settings using step 10.

Running Auto Setup to optimize display settings

Auto Setup initiates an automated process in which the projector optimizes video settings for the active signal. Auto Setup helps to save time in perfecting a display and you can modify the adjustments as required.

1. Make sure of the following before running Auto Setup:
   - *Test patterns are turned off* (on page 51).
   - The active signal is valid.
2. From the remote, select **Auto Signal** or from the web UI, select **Auto Setup**.
3. Select **Run Auto Setup**.
   The system optimizes the active signal and displays a progress message on screen.

Copyright © 2026 Christie Digital Systems USA, Inc. All rights reserved.
If printing, consider using recycled paper and recycle this document after use.

Connecting devices and establishing communication

Learn how to connect external devices to the projector.

Communication and input ports are located on the projector side input panel (operator side).

Video Input panel

The Video Input panel has a variety of ports that can be used for control, 3D sync, upgrading, retrieving interrogators, and connecting audio.

Video Input panel components

The following table lists the video components available depending if the card cage has VOM-IF or VOM-HBI connections. Christie Griffyn® Series supports either the VOM-IF or VOM-HBI.

ID	Port	Description	Applies to	Default enabled	SDVoE enabled
B	HDMI	Accepts digital video data from HDMI 2.0 input with HDCP 2.2 and 1.4 support.	All	X	X
C	SDI	Accepts digital video data from 12G, 6G, 3G, and HD SDI sources.	VOM-IF VOM-HBI	X	
D	DisplayPort	Accepts digital video data from DisplayPort 1.2 input with HDCP 1.3 support.	All	X	
E	Christie Link	Accepts digital video data from QSFP+ 40 GB optical Christie Link input.	All	X	X
F	SDVoE	Accepts digital video data from SDVoE input. Not all projectors support the SDVoE feature. To determine if your projector supports the SDVoE function, see *Determining if SDVoE is supported* (on page 74) or contact Christie Technical Support.	All		X
I	USB -C	Connects a USB-C flash drive that has been formatted with a FAT32 file system.	All		

Copyright © 2026 Christie Digital Systems USA, Inc. All rights reserved.
If printing, consider using recycled paper and recycle this document after use.

ID	Port	Description	Applies to	Default enabled	SDVoE enabled
		Can be used for upgrades, backups, restores, and interrogators.			
K	USB 3.0-A	Connects a USB flash drive that has been formatted with a FAT32 file system. Can be used for upgrades, backups, restores, and interrogators.	All		
L	Ethernet	Provides Ethernet and network connection for remote control. 10/100/1000 Base-T Ethernet x 1 ruggedized connector.	VOM-IF VOM-HBI		
M	3D Sync In/3D Sync Out	Supported for 3D-enabled projectors (mini BNC for VOM-IF and standard BNC on VOM-HBI).	All		
N	Christie Link	Supports QSFP+ 40 GB optical Christie Link through connection for looping HDMI, DisplayPort, SDI, and/or Christie Link inputs to multiple projectors.	All		
O	DP 1.4	Accepts digital video data from DisplayPort 1.4 supporting EDID 1.3 with HDCP 1.3 support (for VOM-HBI only).	VOM-HBI	X	
P	HDMI 2.1	Accepts digital video data from HDMI 2.1 supporting EDID 1.3 with HDCP 2.2 and 1.4 support (for VOM-HBI only).	VOM-HBI		
Q	AES3 Out	Reserved for future use.	VOM-HBI		
S	GPIO	Provides a method for controlling the projector using electrical signals.	All		
R	RS232	Sends/receives Christie serial commands using a standard RS232 serial cable.	All		
T	Audio Out	Connect amplified speakers or headphones to the stereo headphone jack (3.5 mm) and receive the system's audio output signal.	VOM-IF		
U	GigE AUX	Used for communication with the IPG laser rack for Christie Eclipse.	All	X	X
V	Wired keypad	Physically connects a remote control to the projector.	All		

Copyright © 2026 Christie Digital Systems USA, Inc. All rights reserved.
If printing, consider using recycled paper and recycle this document after use.

VOM-HBI Video Input panel

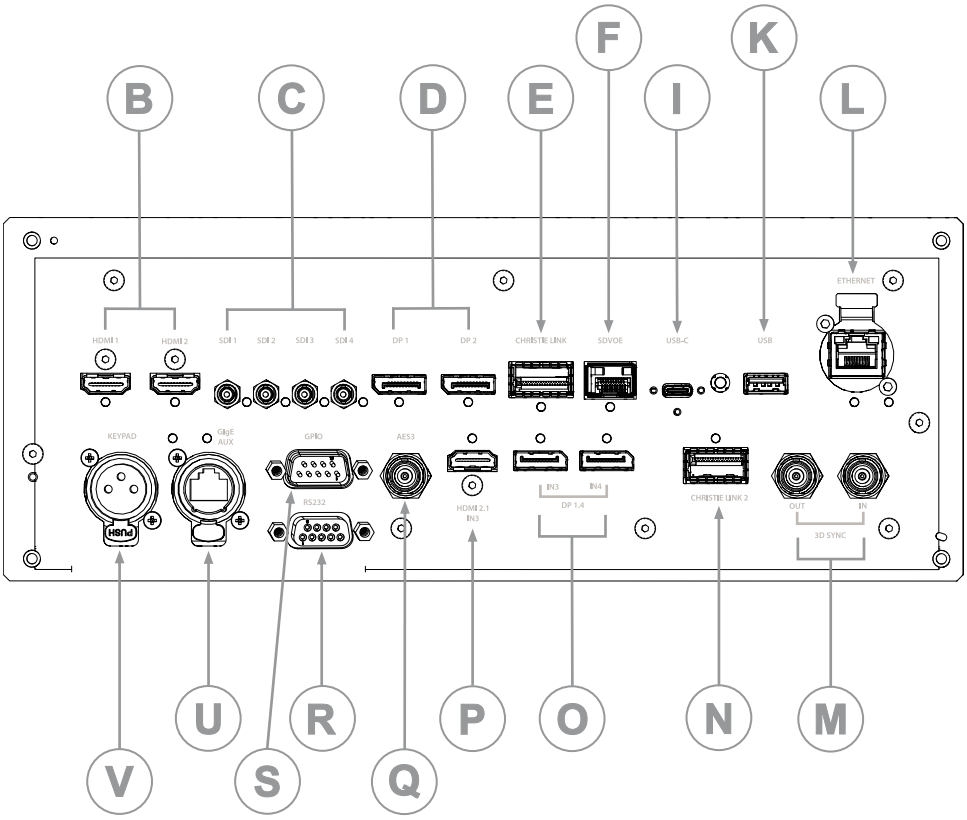

Copyright © 2026 Christie Digital Systems USA, Inc. All rights reserved.
If printing, consider using recycled paper and recycle this document after use.

VOM-IF Video Input panel

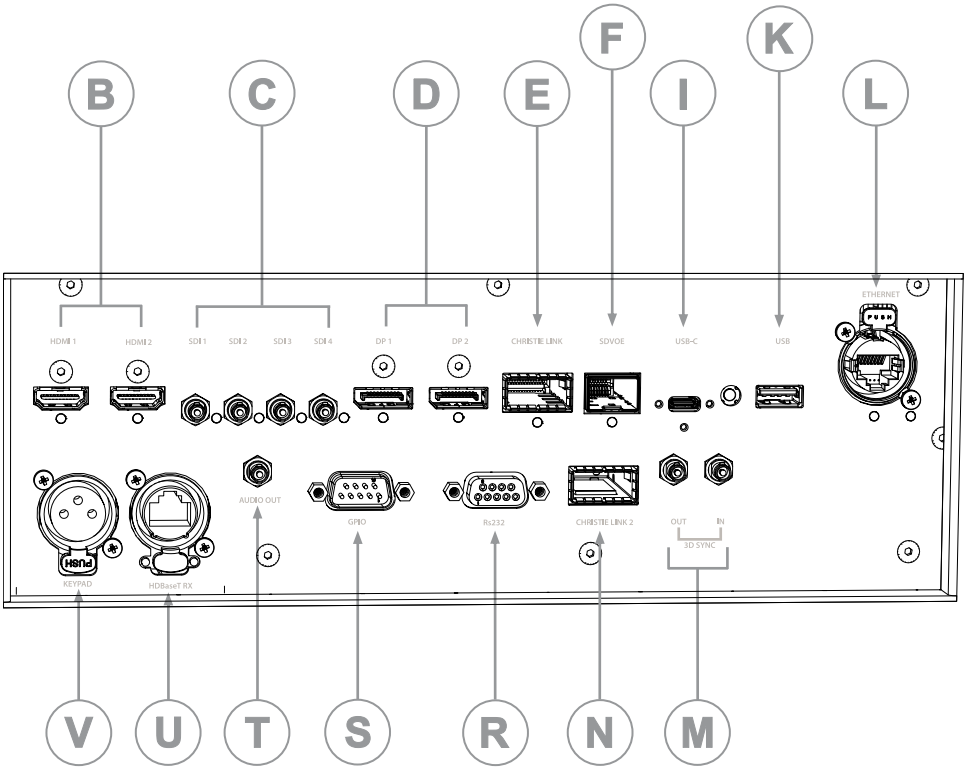

Configuration options

The Video Input panel has two configuration options: Default and SDVoE. The selected option determines what video input configurations are enabled on the Video Input panel.

To enable the SDVoE option, plug in the SDVoE source into the Video Input panel and from the Input Configuration menu select **Main Menu** > **Configuration** > **Input Settings** > **Video Input configuration** > **SDVoE**.

To return to the default configuration, select **Default**.

Configuring video input

Defines which video inputs are available. This setting is persistent so when the projector powers up, it loads the video input defined below.

When changing the selection, the system takes up to 15 seconds to re-configure. During this time the user interface is not responsive.

1. Select **MENU** > **Configuration** > **Input Settings** > **Video Input Configuration**.
2. Select the appropriate video input configuration:
   - **Default**—Supports HDMI, DP, SDI, and ChristieLink. (Default)
   - **SDVoE**—Supports HDMI, SDVoE, and ChristieLink.
3. Select **Enter**.

Copyright © 2026 Christie Digital Systems USA, Inc. All rights reserved.
If printing, consider using recycled paper and recycle this document after use.

Enabling projector communication

Enable the receivers and the wired keypad to communicate with the projector from the remote.

The front and rear IR sensors receive transmissions from the IR remote. Keep the transmission path to these sensors unobstructed for uninterrupted communications with the projector.

Alternatively, you can connect a wired version of the remote to the connector on the IMXB labeled Wired Keypad.

1. Select **MENU** > **Communications** > **Projector Communications**.
2. To assign the projector an ID, select **Projector ID**.
3. Use the up and down keys to enter the projector ID.
4. Select **Enter**.
5. To enable the front IR sensor, select **Front IR Enabled** and select **Enter**.
6. To enable the rear IR sensor, select **Rear IR Enabled** and select **Enter**.
7. To enable a wired version of the remote, select **Wired Keypad Enabled** and select **Enter**.

   By default this feature is enabled.

Setting the remote access level

Determine if and how the projector can be accessed remotely for the RS232 port or the Ethernet.

1. From the display panel, select **MENU** > **Admin** > **Service**.
2. Enter the service password.
3. To determine the remote access for the Ethernet port, select **Remote Access Level (Ethernet)**.
4. Select the appropriate remote access level:
   - No Access
   - Login Required
   - Free Access
5. Select **Enter**.
6. To determine the remote access for the RS232 IN port, select **Remote Access Level (RS232 IN)**.
7. Select the appropriate remote access level:
   - No Access
   - Login Required
   - Free Access
8. Select **Enter**.

Selecting a port configuration

Select a port configuration before you select a video source.

1. From the display panel, select **INPUT**.

Copyright © 2026 Christie Digital Systems USA, Inc. All rights reserved.
If printing, consider using recycled paper and recycle this document after use.

2. To access the port configuration dialog from the input screen, select the right arrow.

   You can also access the Port Configuration screen from **MENU** > **Configuration** > **Input Settings** > **Input Port Configuration**.

3. From the Port Configuration screen, navigate the list of port configurations until you find the selection that best matches your configuration.

   The range of available configurations depends on the projector model and/or input/output combinations. When the Default configuration is selected (**Main Menu** > **Configuration** > **Input Settings** > **Video Input configuration** > **Default**), the following configurations are supported:

   - One-port
   - Two-port
   - Four-port quadrants
   - One-port dual-input 3D (3D license-specific)

   When SDVoE is selected (**Main Menu** > **Configuration** > **Input Settings** > **Video Input configuration** > **SDVoE**), the one-port configuration is selected.

4. To return to the Input screen, select the left arrow.

Selecting a video source

After connecting a video source to the projector and making sure your port configuration is correct, you must select it.

1. From the display panel, select **INPUT**.
2. Navigate the list of input selections until you find a selection that best matches your configuration.

   The range of available input selections depends on the projector model and/or input/output combinations. When the Default configuration is selected, the following inputs are supported for each configuration:

   - One-port—HDMI, SDI, DisplayPort, Christie Link
   - Two-port—DisplayPort, Christie Link
   - Four-port quadrants—SDI
   - One-port dual-input 3D (3D license-specific)—HDMI, SDI, DisplayPort, Christie Link

   When SDVoE is selected, the HDMI, SDVoE, and Christie Link inputs are supported for the one-port configuration.

3. To select the input, select **Enter**.

Connecting an HDMI video source

For the projector to accept digital video data from HDMI sources, plug the HDMI source directly into the Video Input panel (the B callout shows the HDMI 2.0 port and the P callout shows the 2.1 port in the Video Input panel images).

For more details (including images and callouts) on the Video Input panels, see *Video Input panel* (on page 66).

The input configurations listed below are supported.

Copyright © 2026 Christie Digital Systems USA, Inc. All rights reserved.
If printing, consider using recycled paper and recycle this document after use.

Input configuration	Description
One-Port	Enables connection of one HDMI cable. Supports both 2D and 3D frame-packed, top and bottom. In this configuration, the HDMI input supplies the entire video raster.
One-Port, Dual-Input 3D	May be used for Dual-Input 3D configurations, where HDMI 1 = left eye input and HDMI 2 = right eye input.

For supported video formats for your projector model, see *TruLife+ Supported Video Formats technical reference (P/N: 020-104081-XX)*.

Connecting 12G, 6G, 3G, or HD SDI video source

For the projector to accept digital video data from 12G, 6G, 3G, or HD SDI video source, plug the source directly into the Video Input panel (the C callout in the Video Input panel images).

For more details (including images and callouts) on the Video Input panels, see *Video Input panel* (on page 66).

Some video sources may not be fully compliant with the relevant SDI SMPTE standards and do not include the SMPTE 352M Payload ID information. If the picture from a 1.5G or 3G SDI source does not display as expected, contact Christie Technical Support for an `SDI-Payload Override` command for the specific signal type. This allows for the display of signals missing Payload IDs from non-compliant sources.

Input configuration	Description
One-Port	Enables connection of any of the 12G, 6G, 3G, and HD SDI input standards.
One-Port, Dual-Input 3D	May be used for SDI inputs.
Four-Port Quadrant	May be used with four SDI inputs.

For supported video formats for your projector model, see *TruLife+ Supported Video Formats technical reference (P/N: 020-104081-XX)*.

Connecting a DisplayPort video source

For the projector to accept digital video data, plug the DisplayPort source directly into the Video Input panel (the D callout shows the DisplayPort 1.2 port and the O callout shows the DisplayPort 1.4 port in the Video Input panel images).

For more details (including images and callouts) on the Video Input panels, see *Video Input panel* (on page 66).

The input configurations listed below are supported.

Input configuration	Description
One-Port	Enables connection of one DisplayPort cable. Supports both 2D and 3D frame sequential transmission format. In this configuration the DisplayPort input supplies the entire video raster.
Two-Port	Enables connection of two DisplayPort cables. Supports both 2D and 3D frame sequential transmission format. Each DisplayPort input supplies one of two columns of a 4K input image.

Copyright © 2026 Christie Digital Systems USA, Inc. All rights reserved.
If printing, consider using recycled paper and recycle this document after use.

Input configuration	Description
One-Port, Dual-Input 3D	May be used for Dual-Input 3D configurations.

For supported video formats for your projector model, see *TruLife+ Supported Video Formats technical reference (P/N: 020-104081-XX)*.

Connecting Christie Link video source

For the projector to accept digital video data from Christie Link, plug the source directly into the Video Input panel (the E callout in the Video Input panel images).

For more details (including images and callouts) on the Video Input panels, see *Video Input panel* (on page 66).

These input configurations are set up on the Christie Link transmitter. Refer to the Christie Link User Guide (P/N: 020-102234-XX).

Christie Link video loop-out enables signals received on the Christie Link input (labeled Christie Link 1 on the *Video Input panel* (on page 66)) to be passed through to the Christie Link output (labeled Christie Link 2 on the *Video Input panel* (on page 66)). The loop through connection is automatically established whenever active Christie Link QSFP modules are plugged into the respective connectors on the projector's Video Input panel. This is the default behavior which occurs with the Christie Link I/O Configuration set to Input/Loop Out as described in *Selecting Christie Link input* (on page 73).

Input configuration	Description
One-Port	Enables connection of Christie Link 4K transmitter to the projector.
One-Port, Dual-Input 3D	
Two-Port	

For supported video formats for your projector model, see *TruLife+ Supported Video Formats technical reference (P/N: 020-104081-XX)*.

Selecting Christie Link input

The Christie Link I/O Configuration features allows you to select which input you want to display.

1. Select **Menu** > **Configuration** > **Input Settings**.
2. From the Christie Link I/O Configuration list, select one of the following options:
   - Input/Loop Out (Default)
   - Christie Link 1
   - Christie Link 2

Copyright © 2026 Christie Digital Systems USA, Inc. All rights reserved.
If printing, consider using recycled paper and recycle this document after use.

Connecting an SDVoE video source

For the projector to accept digital video data from a Christie Terra Transmitter, plug the SDVoE source directly into the SFP+ connector on the Video Input panel (the F callout in the Video Input panel images).

For more details (including images and callouts) on the Video Input panels, see *Video Input panel* (on page 66).

After plugging the SDVoE source into the Video Input panel, the video source must be selected from the Input Configuration menu by selecting **Main Menu** > **Configuration** > **Input Settings** > **Video Input configuration** > **SDVoE**.

- Not all projectors support the SDVoE feature. To determine if your projector supports the SDVoE function, see *Determining if SDVoE is supported* (on page 74) or contact Christie Technical Support.
- When SDVoE is selected, the DisplayPort and SDI inputs are no longer supported.

The input configuration listed below is supported.

Input configuration	Description
One-Port	Enables 2D or 3D connection from an SDVOE source (such as the Christie Terra Transmitter).

For supported video formats for your projector model, see *TruLife+ Supported Video Formats technical reference (P/N: 020-104081-XX)*.

Determining if SDVoE is supported

Follow these steps to determine if the card cage supports SDVoE:

1. Select **Menu** > **Configuration** > **Input Settings**.
2. View the options in the Video Input Configuration list.
   - If SDVoE is listed, the projector supports SDVoE.
   - If SDVoE (Unsupported) is listed, the projector does not support SDVoE.

Connecting to a computer with USB

The two USB ports can be used for upgrades, backups, restores, profile management, and interrogator retrieval.

- USB-C 3.0 Interface (the I callout in the Video Input panel images)—USB-C Connector with locking mechanism supporting USB 3.0 protocol (5 Gb/s), power over USB (2 A @ 5 VDC).

  This port can be used as a high speed data interface.
- USB Type 3.0-A Interface (the K callout in the Video Input panel images)—USB Type A connector with locking mechanism supporting USB 3.0 protocol (5 Gb/s) and power over USB (2 A @ 5 VDC). Intended for data ingest using USB flash drives for the purposes of upgrading, profile management, and interrogator retrieval.

  This port can be connected to a Christie-recommended WiFi USB device to provide wireless Ethernet control.

Copyright © 2026 Christie Digital Systems USA, Inc. All rights reserved.
If printing, consider using recycled paper and recycle this document after use.

For more details (including images and callouts) on the Video Input panels, see *Video Input panel* (on page 66). For information on performing upgrades, backups, restores, profile management, and interrogator retrieval, refer to the *Christie TruLife+ User Guide (P/N: 020-103315-XX)*.

Connecting to a computer or server with 10/100/1000 base-T Ethernet

Communicate with a remote computer, server, or an existing network using a RJ-45 cable.

The port located on the Video Input panel (the L callout in the Video Input panel images) uses the Christie proprietary protocol or Art-Net control protocol and is intended for Christie accessories or automation controllers only.

For more details (including images and callouts) on the Video Input panels, see *Video Input panel* (on page 66).

1. Use an RJ-45 cable to connect the Ethernet hub or switch to the Ethernet port, located on the projector Video Input panel.

   VOM-IF:

   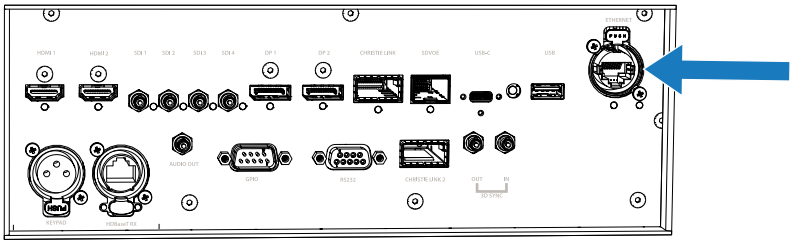

   VOM-HBI:

   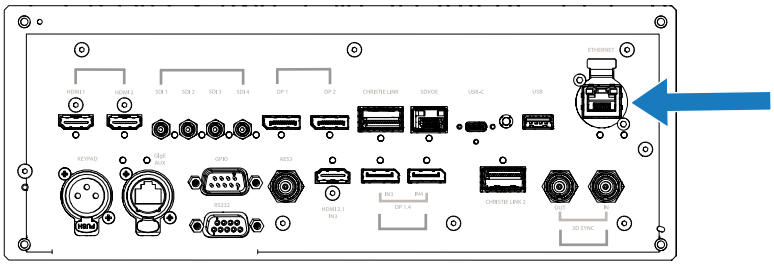

2. When using the Christie serial protocol over Ethernet, connect to port 3002.
3. For applications or equipment using serial communications, use the Christie proprietary serial protocol or Art-Net protocol to communicate with the Ethernet port on the Video Input panel.

Setting up the Ethernet

Ethernet is set up to obtain an IP address automatically if a DHCP server is on the network, modify IP settings, or manually enter an address.

1. From the display panel, use the arrow keys to select **IP Settings**.
2. To set the type of network, select **DHCP** or **Static**.
3. If you selected Static, manually enter the network information for the **IP Address**, **Subnet**, and **Gateway**.
4. Select **Apply** and select **Enter**.

Copyright © 2026 Christie Digital Systems USA, Inc. All rights reserved.
If printing, consider using recycled paper and recycle this document after use.

5. Select **MENU** > **Communications** > **Network Settings**.
6. Select **Device name**.
7. Use the up and down keys to enter the name of the projector.
8. Select **Enter**.

Communicating with Christie Griffyn® Series through Art-Net

Christie Griffyn® Series supports communications through the Art-Net using the Ethernet connector.

1. Select **MENU** > **Communications** > **Art-Net Settings**.
2. Verify the **Enable Art-Net** option is disabled.

   Disabling Art-Net before configuring it ensures Christie Griffyn® Series does not accidentally respond to DMX messages destined for other devices on the network.
3. To specify which subnet the projector belongs to, in the Art-Net Subnet field adjust the value between 0 and 15.

   The subnet provides expandability beyond the universe level.
4. To confirm your selection, select **Enter**.
5. To specify which universe the projector belongs to, so it can filter out all other data packets, in the Art-Net Universe field, adjust the value between 0 and 15.

   For Art-Net, data is broadcast over an Ethernet network, so every device receives every packet of data, whether the device belongs to that universe or not.
6. To confirm your selection, select **Enter**.
7. To determine the starting channel for this projector, in the Base Channel field, adjust the value between 1 and 488.

   If multiple projectors are used on the same universe and are to be controlled independently, this value must be changed. For example, if both projectors are using the Shutter (20 channels), projector 1 should start at base channel 1 and projector 2 should start at base channel 21.
8. To confirm your selection, select **Enter**.
9. Select **Enable Art-Net**.
10. To enable the Art-Net functionality, select **Enter**.

Art-Net channel listing

There are 512 channels per universe. Christie Griffyn® Series specifies 24 channels.

Christie Griffyn® Series has multiple methods of being controlled in addition to Art-Net. If a setting is changed through another interface, the DMX controller can re-assert control by changing the value on the appropriate DMX channel.

Channel	Name	Description	Suggested starting position	Notes
1	Slider Lock	0 to 171 = Locked 172 to 255 = Unlocked	0	—
2	Power	0 to 85 = Powers off the projector (goes into Standby mode)	128	Must be valid for five seconds before it is applied.

Copyright © 2026 Christie Digital Systems USA, Inc. All rights reserved.
If printing, consider using recycled paper and recycle this document after use.

Channel	Name	Description	Suggested starting position	Notes
		86 to 171 = Cancel timer 172 to 255 = Powers on the projector (switches light source on, warm up mode)		
3	Shutter	0 to 85 = Closes the shutter (black screen) 172 to 255 = Opens the shutter (live video)	255	Christie recommends setting this channel to 255 prior to powering up the projector so it is consistent with the shutter state after the projector is fully on.
4	Lens Shift Enable	0 to 171 = Disables lens shift 172 to 255 = Enables lens shift	—	Locks all lens motors.
5	Zoom (Coarse)	0 = Smallest image possible (0%) 255 = Largest image possible (100%)	128	• Locked by the Lens Shift Enable channel. • Scaled as a percentage of the total control range. • A 250 ms delay exists before sending this channel to the projector.
6	Zoom (Fine)			
7	Focus (Coarse)	0 = 0% 255 = 100%	128	• Locked by the Lens Shift Enable channel. • Scaled as a percentage of the total control range. • A 250 ms delay exists before sending this channel to the projector.
8	Focus (Fine)			
9	Lens Horizontal Position (Coarse)	0 = Full left position (0%) 255 = Full right position (100%)	128	• Locked by the Lens Shift Enable channel. • A 250 ms delay exists before sending this channel to the projector.
10	Lens Horizontal Position (Fine)			
11	Lens Vertical Position (Coarse)	0 = Full lower position (0%) 255 = Full upper position (100%)	128	• Locked by the Lens Shift Enable channel. • A 250 ms delay exists before sending this channel to the projector.
12	Lens Vertical Position (Fine)			
13	Input	1 to 80 = Input index 86 = Load	0	To change inputs, send the following sequence:

Copyright © 2026 Christie Digital Systems USA, Inc. All rights reserved.
If printing, consider using recycled paper and recycle this document after use.

Channel	Name	Description	Suggested starting position	Notes
		91 to 170 = Additional input indices 171 = Execute		`Load` > `Input index` > `Execute` Channel 1 slider lock can be used if a keypad is not available for the input selection.
14	Fade Time	0 = 0 seconds 250 = 2.5 seconds	—	Determines the length of time it takes for the shutter to open and close with a fading effect.
15 to 24	Reserved	Reserved for future use.	—	—

Index list for the input channel

the following table provides the index information for the input channel.

Not all options listed in the table are available. Available options depend on the Video Input configuration option selected: **Default** or **SDVoE**.

Input index	Description
0	One-port HDMI0
1	One-port HDMI1
2	Reserved for future use
3	One-port DisplayPort0
4	One-port DisplayPort1
5	Reserved for future use
6	One-port SDI0
7	One-port SDI1
8	One-port SDI2
9	One-port SDI3
11	One-port SDVoE
12	Christie Link A
14	One-port VOM-HDMI (2.1)
15	One-port VOM-DP0 (1.4)
16	One-port VOM-DP1 (1.4)
20	Two-port HDMI
21	Two-port DisplayPort
22	Four-port SDI

Copyright © 2026 Christie Digital Systems USA, Inc. All rights reserved.
If printing, consider using recycled paper and recycle this document after use.

Input index	Description
23	Two-port VOM-DisplayPort
30	One-port, dual-input 3D L:HDMI0, R:HDMI1
31	One-port, dual-input 3D L:DP0, R:DP1
32	One-port, dual-input 3D L:SDI0, R:SDI1
33	One-port, dual-input 3D L:SDI2, R:SDI3
35	One-port, dual-input 3D L:VOM-DP0, R:VOM-DP1

Configuring the 3D Sync in/3D Sync out interface

The 3D sync interface is supported for 3D-enabled projectors (the M callout in the Video Input panel images). A Mirage license is required.

For more details (including images and callouts) on the Video Input panels, see *Video Input panel* (on page 66).

The projector can configure the 3D output sync port to supply an output synchronized right eye/left eye signal for:

- Another projector
- 3D glasses emitter

The 3D sync input and output interface connector (mini BNC for VOM-IF and standard BNC on VOM-HBI and CAVE LP) is a micro 75 ohm BNC connector.

Configuring the RS232 port

Configure the RS232 port to send Christie serial commands using a standard RS232 serial cable (the R callout in the Video Input panel images).

For more details (including images and callouts) on the Video Input panels, see *Video Input panel* (on page 66).

For more information, on the serial commands, see the *Christie TruLife+ Serial Commands Guide (P/N: 020-103316-XX)* .

1. Select **Menu** > **Communications** > **Projector Communication**.
2. Use the down arrow to select **Baud Rate**.
3. Select the appropriate baud rate and select **Enter**.
4. Use the down arrow to select **Network Routing**.
5. Select the type network routing appropriate for your projector and select **Enter**.

Copyright © 2026 Christie Digital Systems USA, Inc. All rights reserved.
If printing, consider using recycled paper and recycle this document after use.

Configuring the GPIO

The Generic Purpose Input Output (GPIO) provides a flexible method of interfacing with external devices to the projector.

The GPIO is configured to automate real time events. Each of the seven pins is defined as either an input or output depending on the required outcome. The remaining two pins are reserved for ground and power.

Configure the pin as an input if you want the projector to respond to something the device does and as an output if you want the external device to respond to an action taken by the projector. For example, configure the pin as an output if you want the lighting in a room to automatically dim when the projector is turned on.

This feature is only available on the web interface.

1. From the home page of the web interface, select **Macros and GPIO**.
2. Select **GPIO Configuration**.
3. In the GPIO Configuration dialog under Update the New Configuration, toggle the pins you want active for the input and output.

   A blue pin indicates input and a green pin indicates output.
4. Select **Apply**.

GPIO connector

The GPIO connector located on the input panel (the S callout in the Video Input panel images) provides a flexible method of interfacing with the projector. Seven GPIO pins are available on the nine pin D-Sub GPIO connector. Two other pins are reserved for ground and power.

For more details (including images and callouts) on the Video Input panels, see *Video Input panel* (on page 66).

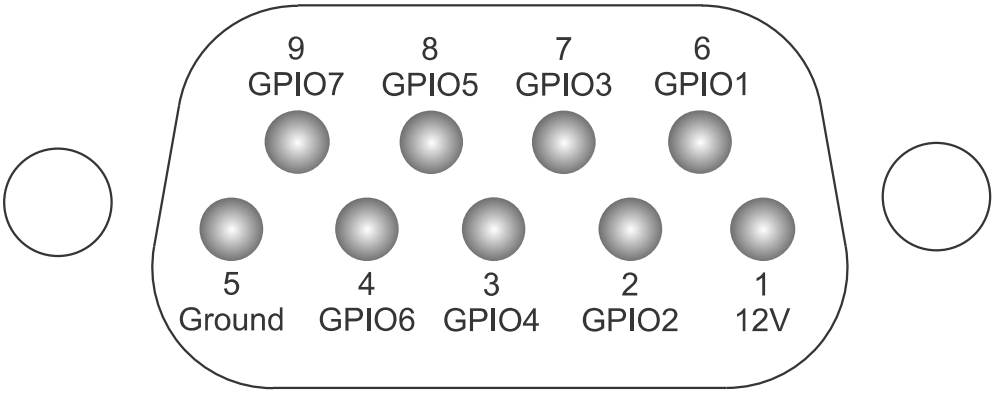

D-SUB pin number	Signal	Output high (Voh)	Notes
Pin 1	+12V	—	1A max
Pin 2	GPIO 2	5V	75mA max (e)fused to prevent damage
Pin 3	GPIO 4		
Pin 4	GPIO 6		

Copyright © 2026 Christie Digital Systems USA, Inc. All rights reserved.
If printing, consider using recycled paper and recycle this document after use.

D-SUB pin number	Signal	Output high (Voh)	Notes
Pin 5	Ground	—	—
Pin 6	GPIO 1	5V	75mA max (e)fused to prevent damage
Pin 7	GPIO 3		
Pin 8	GPIO 5		
Pin 9	GPIO 7		

All GPIO pins are weakly pulled up to 3.3V.

Enabling the wired remote keypad

The wired remote keypad interface supports the NEC IR communication protocol.

1. Connect the remote cable in the Wired keypad port on the Video Input panel.

   VOM-IF:

   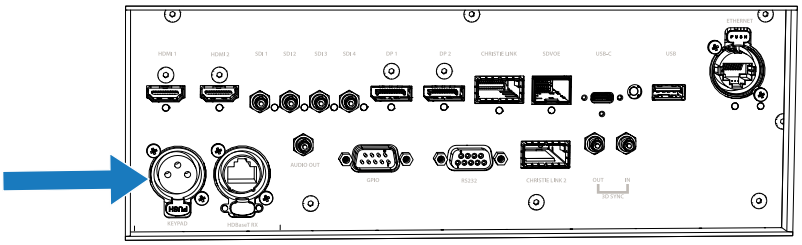

   VOM-HBI:

   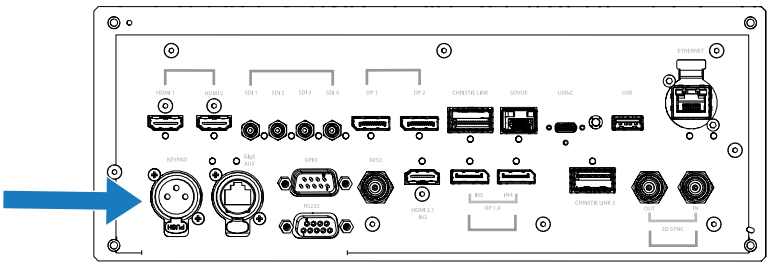

2. Connect the remote cable in the bottom of the remote.

Copyright © 2026 Christie Digital Systems USA, Inc. All rights reserved.
If printing, consider using recycled paper and recycle this document after use.

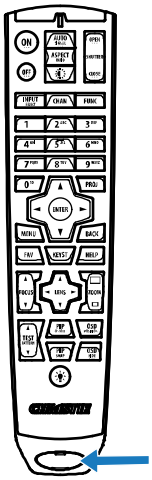

3. On the projector, select **MENU** > **Communications** > **Projector Communications**.
4. To enable a wired version of the remote, select **Wired Keypad Enabled** and select **Enter**.
   By default this feature is enabled.

Copyright © 2026 Christie Digital Systems USA, Inc. All rights reserved.
If printing, consider using recycled paper and recycle this document after use.

3D setup

The projector is capable of displaying stereoscopic 3D video sources, relying on additional hardware (stereo emitters and glasses) to complete the display system.

Images generated from a stereo 3D video source consist of a series of images (frames) that alternate quickly between two slightly different viewpoints, corresponding to our left and right eyes. When these frames are displayed fast enough and viewed with special glasses synchronized to the left/right (L/R) changes, the resulting image appears with the same depth and perspective sense in the real world.

3D requirements

Stereo 3D applications require a stereo 3D-capable source, special hardware and software setups, and the projector's 3D Settings menu option to control the projector's processing, synchronization, and displaying of the stereoscopic 3D source material.

Hardware requirements

Understand the hardware requirements for stereo 3D applications.

- Christie Griffyn® Series projector

  A Mirage license is only required for high frame rate: 2D up to 4K at 120 Hz and 4K 3D up to 120 Hz (48-60 Hz per eye).
- 3D stereo sync cable for direct-input 3D (and frame doubled)
- A source, usually a computer with a 3D graphics card(s)
- Emitter for controlling active shutter glasses

  or

  A qualified device that mounts in front of the lens of the projector to process the light from the lens into a passive polarized light. Contact your Immersive dealer for more information.

Software and content requirements

Understand the software and content requirements for stereo 3D applications.

- Any 3D computer software that supports 3D stereo on a supported computer(s) with associated graphic cards (suggested cards include AMD or NVIDIA)
- A video stream from a video source prepared to be sequential content (for direct-input 3D) or two video streams from a video source that has been prepared to be supplied left eye and right eye concurrently and frame locked (dual-input 3D)

Copyright © 2026 Christie Digital Systems USA, Inc. All rights reserved.
If printing, consider using recycled paper and recycle this document after use.

Active stereo 3D configuration

Use the following diagram to understand a typical hardware configuration for active stereo 3D systems.

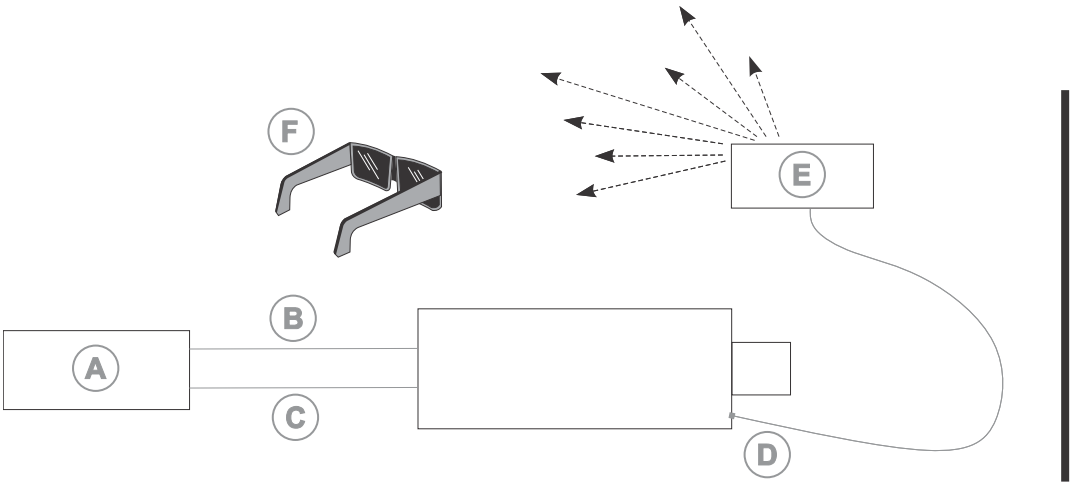

- A—Server/PC with stereo 3D-capable video sources
- B—L/R sync signal (3D-direct input only)
- C—3D direct or 3D dual-input connections
- D—3D stereo synch cable
- E—IR emitter
- F—Active glasses

In response to the 3D Sync Out signal from the projector, the IR emitter emits an infrared signal to a receiver in the active 3D shutter glasses. This synchronizes the active glasses to alternatively open and close for the active stereo 3D applications.

Copyright © 2026 Christie Digital Systems USA, Inc. All rights reserved.
If printing, consider using recycled paper and recycle this document after use.

Passive stereo 3D configuration

Use the following diagram to understand a typical hardware configuration for passive stereo 3D systems.

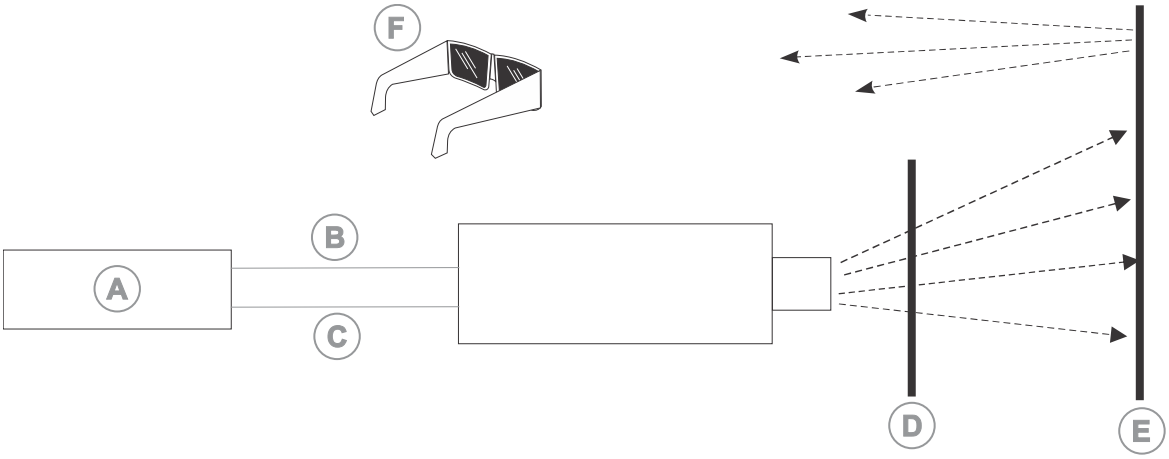

- A—Server/PC with stereo 3D-capable video sources
- B—L/R sync signal (3D-direct input only)
- C—3D direct or 3D dual-input connections
- D—3D active filter cell
- E—Polarization maintaining screen
- F—Passive polarizing glasses

3D system timing

The projected video must be optimized for the glasses' shutter speed or polarization filter performance to prevent obvious "ghosting" of the video content (known as cross-talk in stereo 3D applications) or other more subtle color artifacts.

Visual performance can be optimized by adjusting the Dark Interval and the 3D Sync Delay settings. Consult the documentation for your glasses or polarization filter and keep their specifications in mind when configuring the projector for 3D operation.

3D input video configurations

The stereo 3D input video stream may be supplied from the video server to the projector in two configurations: direct-input 3D or dual-input 3D.

Configuration	Description
Direct-input 3D	In this configuration a single video stream is provided by the video server, with the left eye and right eye frames supplied as alternate frames within the video stream. A 3D input sync may be used to identify the left eye frames. The direct-input 3D video stream may be supplied by a One-Port input video configuration (such as one cable supplying the entire frame).

Copyright © 2026 Christie Digital Systems USA, Inc. All rights reserved.
If printing, consider using recycled paper and recycle this document after use.

Configuration	Description
Dual-input 3D	In this configuration two video streams are provided by the video server, with the left eye supplied by one stream and the right eye supplied by the other. The video streams are frame locked and supplied concurrently. The dual-input 3D video streams may be supplied by two One-Port input video configurations (such as one cable supplying the entire frame for each eye, with a total of two cables).

Setting up a single projector to display 3D content

The projector must be installed correctly to display 2D content (optically aligned, focused, and so on) before completing the following steps to display the 3D content.

1. *Enable 3D mode* (on page 86).
2. *Confirm the emitter setup* (on page 86).
3. *Configure the projector for the 3D source* (on page 87).

Enabling 3D mode

Select the mode for your 3D operation.

1. To enable 3D mode, select **MENU** > **Image Settings** > **3D Settings** > **3D Mode**.
2. Select the appropriate 3D mode:
   - Off—Disable the 3D operation.
   - Auto Detect—Automatically determine which 3D mode to use based on auxiliary video data, for example, HDMI info frame.
   - Multi-Flash 3D—Display content multiple times to provide a 3D image.

Confirming the emitter setup

Define whether the 3D Sync is output and control how it is processed.

1. To set the 3D output to emitter, select **MENU** > **Image Settings** > **3D Settings** > **3D Sync Output**.
2. Select **To Emitter**.
3. Select **Enter**.
4. To enable the 3D test pattern, select **3D Test Pattern**.
5. Select **Enter**.
6. To configure the dark interval so the amount of dark time aligns with the amount of time required for the glasses to switch, select **Dark Interval**.
7. Adjust the slider or enter the dark interval value as required.
8. To confirm your selection, select **Enter**.

Copyright © 2026 Christie Digital Systems USA, Inc. All rights reserved.
If printing, consider using recycled paper and recycle this document after use.

9. View the displayed test pattern. If you can see both Ls and Rs with both eyes, increase the dark interval until the Ls are only visible to the left eye and the Rs are only visible to the right eye.
10. Optionally, to adjust the 3D Sync delay, select **3D Sync Delay**.

    This adjusts the timing of the sync pulse in relation to the dark time transition on the DMDs. Use the default value of 0 as a starting point.
11. Adjust the slider or enter the delay value.
12. To confirm your selection, select **Enter**.

Configuring the projector for the 3D source

Configure the projector for the 3D source.

1. Select the *appropriate port configuration* (on page 70) and then set the *inputs for your video source* (on page 71).
2. To select the correct EDID timing, select **MENU** > **Configuration** > **Input Settings** > **EDID Timing**.
3. Select the required EDID timing and select **Enter**.
4. Connect all the required cables between the 3D source and the projector.
5. Configure your 3D source.

Connecting devices to the 3D sync ports

The 3D Sync Input and Output ports located on the Video Input panel provide a convenient method for interfacing the projector to the 3D stereo projection system.

Connect the 3D Sync Input to the video source for synchronization of the left eye/right eye frames of Direct input 3D or for frame doubled content.

The 3D Sync Input is not required for Dual-Input 3D. The 3D Sync Output is available for control of an IR Emitter for active glasses or a polarization device for passive glasses.

Copyright © 2026 Christie Digital Systems USA, Inc. All rights reserved.
If printing, consider using recycled paper and recycle this document after use.

Performing a backup

After completing projector calibrations and configurations, perform a backup so the projector can be restored to the initial configuration if needed. For details on performing a backup, see the *Christie TruLife+ User Guide (P/N: 020-103315-XX)*.

Copyright © 2026 Christie Digital Systems USA, Inc. All rights reserved.
If printing, consider using recycled paper and recycle this document after use.

Regulatory

This product conforms to the latest regulations and standards related to product safety, environmental, and electromagnetic compatibility (EMC) requirements.

Safety

- CAN/CSA C22.2 No. 60950-1-07 + Am 1:2011+ Am 2:2014 Information Technology Equipment Safety Part 1: General Requirements
- ANSI/UL 60950-1-2014 – Information Technology Equipment – Safety – Part 1: General Requirements
- IEC 60950-1:2005 + Amendment 1:2009 + Amendment 2:2013 – Information Technology Equipment - Safety - Part 1: General Requirements
- EN 60950-1:2006 + A11:2009 + A1:2010 + A12:2011 + A2:2013 – Information Technology Equipment – Safety – Part 1: General Requirements
- CAN/CSA-C22.2 No. 62368-1: 2014 – Audio/video, information and communication technology equipment - Part 1: Safety requirements.
- UL 62368-1: 2014 – Audio/video, information and communication technology equipment - Part 1: Safety requirements.
- IEC 62368-1:2014 - Audio/Video, Information And Communication Technology Equipment - Part 1: Safety Requirements
- EN 62368-1: 2014 – Audio Video, IT & Communication Technology Equipment (AV/ICT) – Part 1: Safety Requirements
- IEC 62471-5:2015 - Photobiological Safety of Lamps and Lamp Systems - Part 5: Image projectors
- IEC 60825-1:2014 - Safety of Laser Products - Part 1: Equipment Classification and Requirements
- ANSI Z136.1:2014 - Safety of Lasers

Electro-magnetic compatibility

Emissions

- FCC CFR47, Part 15, Subpart B, Class A – Unintentional Radiators
- CAN ICES-003 (A)/NMB-003 (A) – Information Technology Equipment (Including Digital Apparatus) – Limits and Methods of Measurement
- CISPR 32/EN 55032, Class A – Electromagnetic Compatibility of Multimedia Equipment – Emission Requirements
- IEC 61000-3-2/EN61000-3-2 - Limits for Harmonic Current Emissions

Copyright © 2026 Christie Digital Systems USA, Inc. All rights reserved.
If printing, consider using recycled paper and recycle this document after use.

- IEC 61000-3-3/EN 61000-3-3: Limitations of Voltage Changes, Voltage Fluctuations, and Flicker input current ≤ 16 A per phase and not subject to conditional connection

Immunity

- CISPR 35/EN 55035 Electromagnetic compatibility of multimedia equipment - Immunity requirements

California law on security

- California Law Requiring Internet Connected Devices To Include Reasonable Security Features (California Civil Code Section 1798.91.04)

Environmental

- EU Directive (2011/65/EU) on the restriction of the uses of certain hazardous substances (RoHS) in electrical and electronic equipment and the applicable official amendment(s).
- EU Directive (2012/19/EU) on waste and electrical and electronic equipment (WEEE) and the applicable official amendment(s).
- Regulation (EC) No. 1907/2006 on the registration, evaluation, authorization and restriction of chemicals (REACH) and the applicable official amendment(s).
- China Ministry of Information Industry (along with 7 other Government Agencies) Order No.32 (01/2016) on the control of pollution caused by electronic information products, hazardous substances concentration limits (GB/T 26572 - 2011), and the applicable product marking requirement (SJ/T 11364 - 2014).

International packaging recycling mark requirements.

- EU Directive (2012/19/EU) on waste and electrical and electronic equipment (WEEE) and the applicable official amendment(s).
- EU Directive (94/62/EC) on packaging and packaging waste
- China packaging recycling mark standard (GB18455-2001)

Copyright © 2026 Christie Digital Systems USA, Inc. All rights reserved.
If printing, consider using recycled paper and recycle this document after use.