REVISION HISTORY OF: 020-103410-01			
REV	DESCRIPTION OF CHANGE	BY	REV DATE
01	INITIAL RELEASE	ZIWEI	02/07/2020
02	UPDATE CLEARANCE DESCRIPTION	KECHEN	10/10/2020
03	UPDATE CLEARANCE DESCRIPTION	KECHEN	01/22/2021
04	UPDATE ROOM HEAT LOAD	KECHEN	07/12/2021

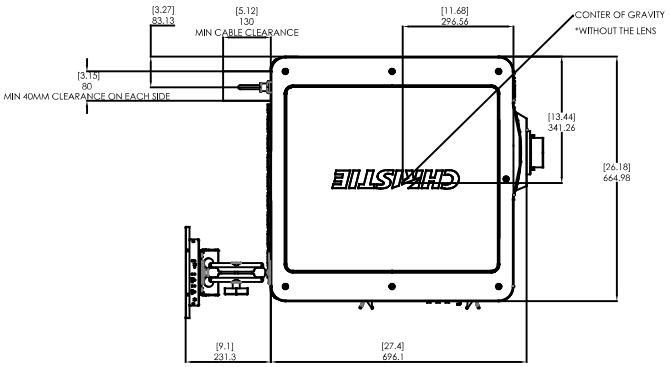

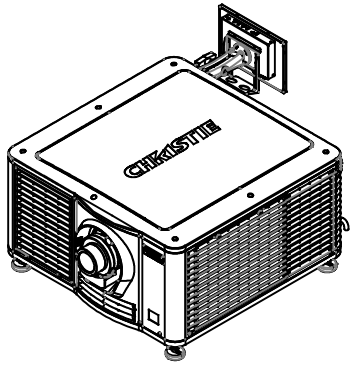

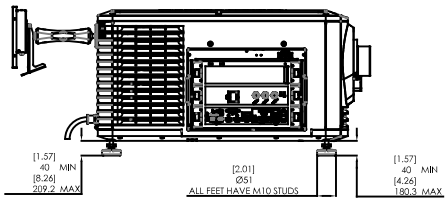

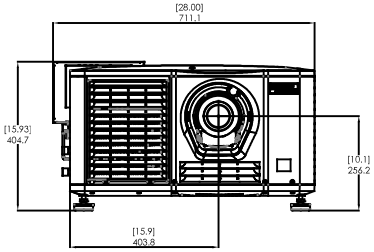

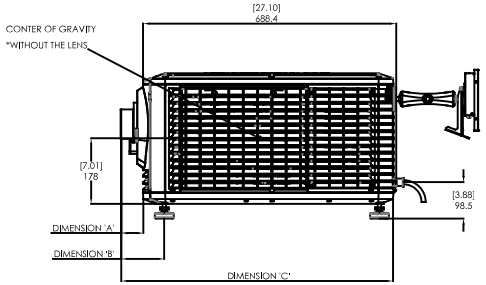

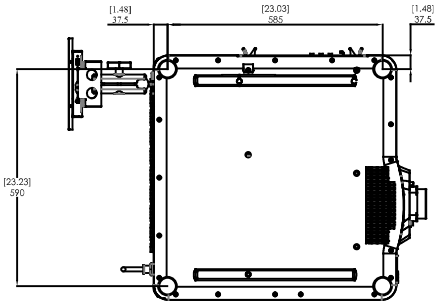

LENS	PART NUMBER	DIMENSION 'A'	DIMENSION 'B'	DIMENSION 'C'	WEIGHT
1.2 - 1.72:1.69"	108-494108-01	47.9 [1.89]	105.4 [4.15]	727.9 [28.66]	5.97 lb (2.71 kg)
1.33 - 2.1:1.69"	108-495109-01	47.9 [1.89]	105.4 [4.15]	727.9 [28.66]	6.04 lb (2.74 kg)
1.62 - 2.7:1.69"	108-496100-01	46.9 [1.85]	104.4 [4.11]	726.9 [28.62]	6.04 lb (2.74 kg)
2.09 - 3.9:1.69"	108-497101-01	37 [1.46]	94.5 [3.72]	717 [28.23]	5.86 lb (2.66 kg)

Model	CP2306-RGBe	CP2308-RGBe	CP2310-RGBe
Projector Power(W)	820	1000	1180
1 Room Heat Load(BTU)	2800	3415	4030

NOTES:

1. MASS: Projector: 55 kg (121 lbs) - no lens
   Operational: 57.7 kg (127 lbs) - with lens

OPERATIONAL AMBIENT AIR TEMPERATURE: 15°C (59F) MIN to 35°C (95F) MAX
NON-OPERATIONAL (TRANSPORTING) AMBIENT AIR TEMPERATURE: -20°C (-4F) MIN to 60°C(140F) MAX

ALTITUDE: 0-3000M (10,000ft)

2. POWER REQUIREMENTS:
INPUT A: 200 - 240 VAC, 7A
INPUT B (UPS): 100 - 240 VAC, 4A

SIDE ROTATION: ± 5° MAX (AROUND PROJECTION AXIS)
TILT ANGLE: +15° to -3° FROM HORIZONTAL (REAR FEET ADJUSTMENT)

UNITS: INCHES / MILLIMETERS
UNLESS OTHERWISE SPECIFIED
INTERPRET DIMENSIONS AND TOLERANCES PER ASME Y14.5M-1994
TOLERANCES APPLIES SHOWN BELOW

DECIMAL PLACES	INCHES	MILLIMETERS
XXX	± .005	± 0.4
XX	± .010	± 0.1
X	± .030	± 0.5

ANGULAR TOLERANCE	
XX°	±1.0°
XX.X°	±0.5°

DRAWN BY: Kaiming He
DRAWN DATE: 02/07/2020
APPROVED BY: Jonathan Wang
APPROVAL DATE: 02/07/2020

PROPRIETARY
NOT TO BE REPRODUCED OR REPRODUCED AND DISCLOSED TO THIRD PARTIES WITHOUT PERMISSION OF CHRISTIE

THIRD ANGLE PROJECTION

CHRISTIE DIGITAL SYSTEMS USA, INC.
CHRISTIE DIGITAL SYSTEMS CANADA, INC.

PART DESCRIPTION
DWG LINE CP23XX-RGBe

SIZE	PART NUMBER	REVISION
E	020-103410-01	04

SCALE: 1:5 | WEIGHT: - LBS ▶ KGS | SHEET 1 OF 4

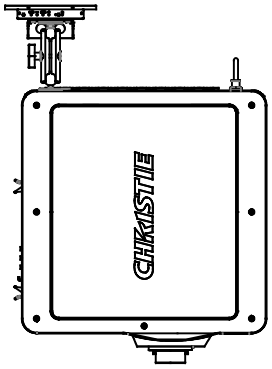

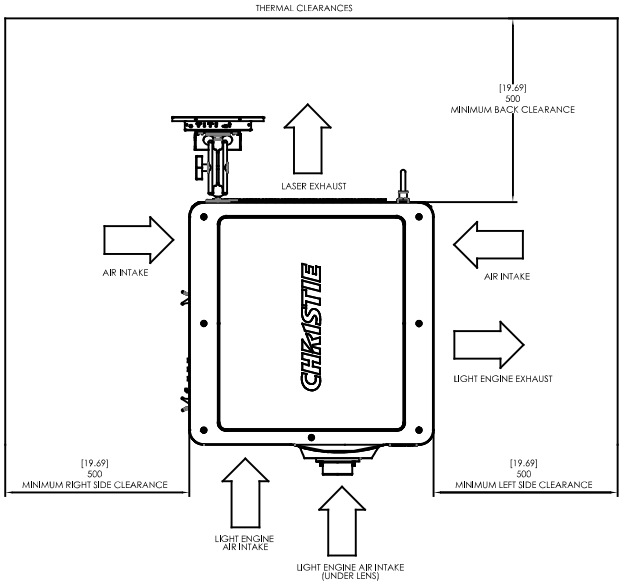

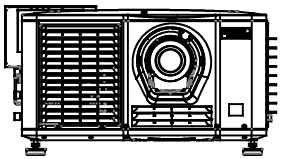

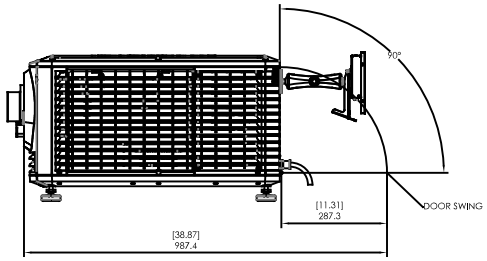

PROPRIETARY
NOT TO BE DISCLOSED OR REPRODUCED IN ANY MANNER WITHOUT THE EXPRESS WRITTEN PERMISSION OF CHRISTIE

CHRISTIE
CHRISTIE DIGITAL SYSTEMS USA, INC.
CHRISTIE DIGITAL SYSTEMS CANADA, INC.

REV	ESTIMATE	SHEET
E	020-103410-01	04

SCALE: 1:5 | REF: • LBS • KG | SHEET 2 OF 4

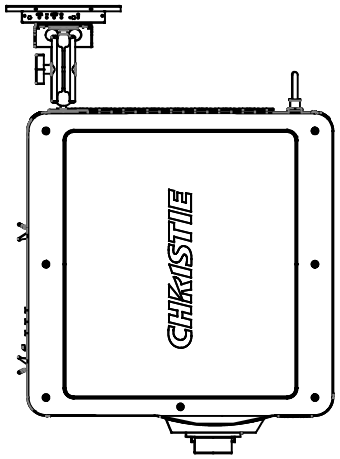

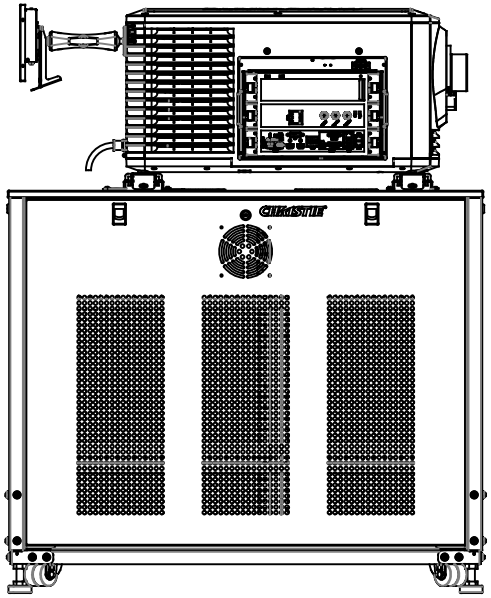

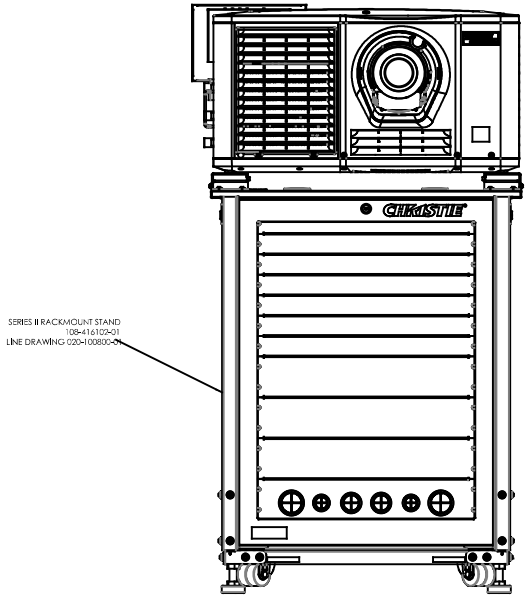

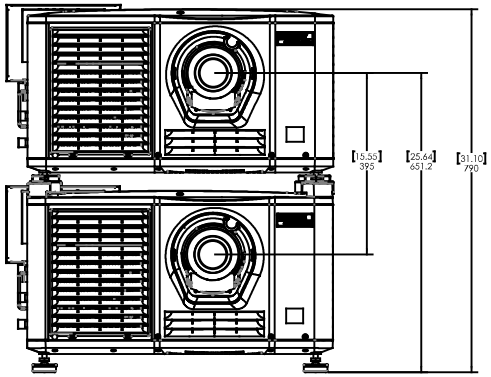

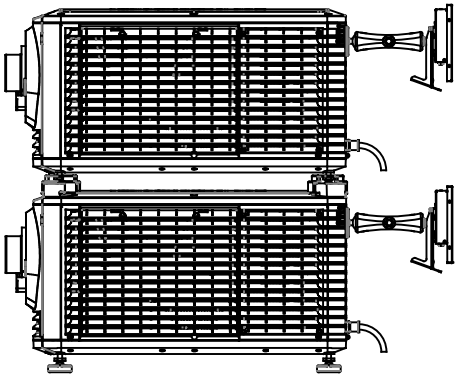

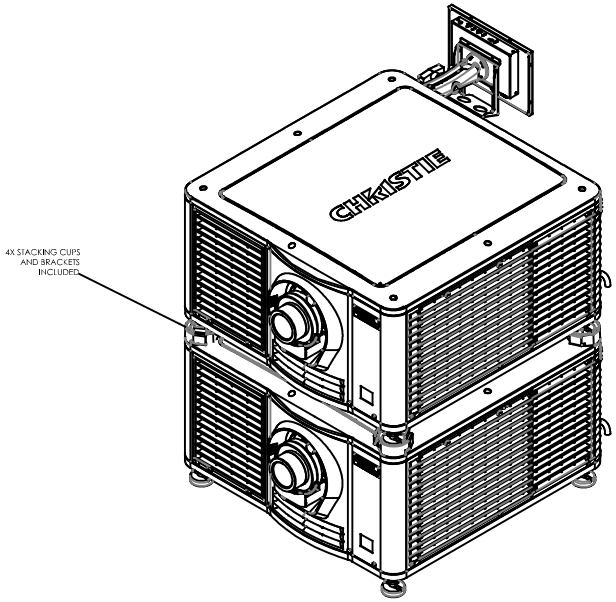

PROPRIETARY
NOT TO BE DISCLOSED OR REPRODUCED IN ANY MANNER WITHOUT THE EXPRESS WRITTEN PERMISSION OF CHRISTIE

CHRISTIE
CHRISTIE DIGITAL SYSTEMS USA, INC.
CHRISTIE DIGITAL SYSTEMS CANADA, INC.

REV	DRAWING NUMBER	SHEET
E	020-103410-01	04

SCALE: 1:4 | UNIT: - LBS [- KG] | SHEET 3 OF 4

FUJIFILM 1.2-1.72:1.69" (108-494108-XX)

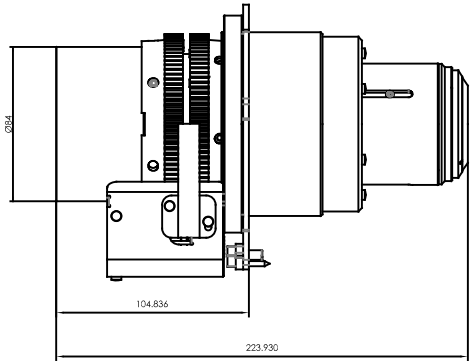

FUJIFILM 1.62-2.70:1.69" (108-496100-XX)

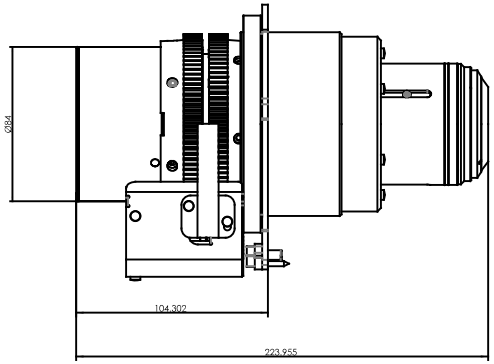

FUJIFILM 1.33-2.10:1 .69" (108-495109-XX)

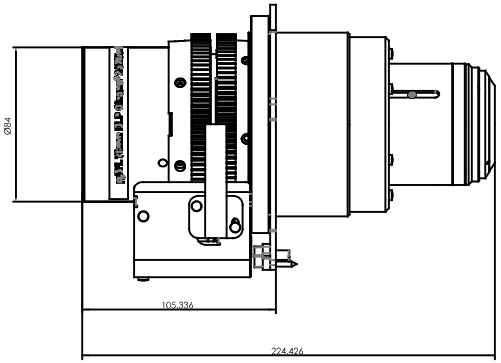

FUJIFILM 2.09-3.9:1.69" (108-497101-XX)

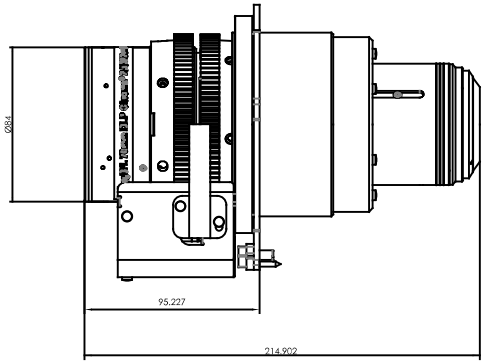

PROPRIETARY
NOT TO BE DISCLOSED OR REPRODUCED IN ANY MANNER WITHOUT THE EXPRESS WRITTEN PERMISSION OF CHRISTIE

CHRISTIE
CHRISTIE DIGITAL SYSTEMS USA, INC.
CHRISTIE DIGITAL SYSTEMS CANADA, INC.

REV	ESTIMATE/PART		
E	020-103410-01		04
SCALE 1:1	UNIT - LBS [KG]		SHEET 4 OF 4