Installation and Setup Guide

020-103872-06

Christie IMB-S4

CHRISTIE®

NOTICES

COPYRIGHT AND TRADEMARKS

Copyright © 2026 Christie Digital Systems USA Inc. All rights reserved.

All brand names and product names are trademarks, registered trademarks or trade names of their respective holders.

GENERAL

Every effort has been made to ensure accuracy, however in some cases changes in the products or availability could occur which may not be reflected in this document. Christie reserves the right to make changes to specifications at any time without notice. Performance specifications are typical, but may vary depending on conditions beyond Christie's control such as maintenance of the product in proper working conditions. Performance specifications are based on information available at the time of printing. Christie makes no warranty of any kind with regard to this material, including, but not limited to, implied warranties of fitness for a particular purpose. Christie will not be liable for errors contained herein or for incidental or consequential damages in connection with the performance or use of this material. Our centers of excellence for manufacturing in Kitchener, Ontario, Canada and in Shenzhen, China are ISO 9001:2015 Quality Management System-certified.

Christie is committed to making our documents free from language bias; however, we are not responsible for the language used on any linked or third-party documentation.

For the most current technical documentation and office contact information, visit *https://www.christiedigital.com/*.

Warranty

Products are warranted under Christie's standard limited warranty, the details of which are available at *https://www.christiedigital.com/help-center/warranties/* or by contacting your Christie dealer or Christie.

PREVENTATIVE MAINTENANCE

Preventative maintenance is an important part of the continued and proper operation of your product. Failure to perform maintenance as required, and in accordance with the maintenance schedule specified by Christie, voids the warranty. For preventative maintenance schedules, refer to *www.christiedigital.com*.

REGULATORY

The product has been tested and found to comply with the limits for a Class A digital device, pursuant to Part 15 of the FCC Rules. These limits are designed to provide reasonable protection against harmful interference when the product is operated in a commercial environment. The product generates, uses, and can radiate radio frequency energy and, if not installed and used in accordance with the instruction manual, may cause harmful interference to radio communications. Operation of the product in a residential area is likely to cause harmful interference in which case the user will be required to correct the interference at the user's own expense. Changes or modifications not expressly approved by the party responsible for compliance could void the user's authority to operate the equipment

CAN ICES-3 (A) / NMB-3 (A)

이 기기는 업무용(A급)으로 전자파적합등록을 한 기기이오니 판매자 또는 사용자는 이점을 주의하시기 바라며, 가정 외의 지역에서 사용하는 것을 목적으로 합니다.

ENVIRONMENTAL

The product is designed and manufactured with high-quality materials and components some of which can be recycled and reused. This symbol means electrical and electronic equipment, at their end-of-life, should be disposed of separately from regular waste. Please dispose of the product appropriately and according to local regulations. In the European Union, separate collection systems are for used electrical and electronic products.

If printing this document, consider printing only the pages you need and select the double-sided option.

Please help us to conserve the environment we live in!

Notation

Learn the hazard and information symbols used in the product documentation.

Danger messages indicate a hazardous situation which, if not avoided, results in death or serious injury.

Warning messages indicate a hazardous situation which, if not avoided, could result in death or serious injury.

Caution messages indicate a hazardous situation which, if not avoided, could result in minor or moderate injury.

Notice messages indicate a hazardous situation which, if not avoided, may result in equipment or property damage.

Information messages provide additional information, emphasize or provide a useful tip.

Content

Safety precautions. 5

General safety precautions. 5

Introduction. 6

What's new in the guide?. 6

Key features. 6

Christie IMB components. 7

Prerequisites. 8

IP and subnet considerations. 8

Related documentation. 8

Accessing product documentation. 8

Viewing Christie University product training videos. 9

Technical support. 9

Installing and configuring. 10

Site requirements. 10

Best practices when installing an IMB. 10

Connecting to a content network. 11

Content network topology. 12

LED status indicators. 13

Installing the Christie IMB. 14

Synchronizing playback on multiple projectors. 17

Multiple projector system topology 18

Connecting the hardware. 19

Configuring the primary projector. 19

Configuring the secondary projector(s). 20

Logging into the projector. 20

Selecting Integrated Media Block (IMB) preferences. 21

Checking for the latest software version. 21

Activating marriage. 22

Configuring audio settings. 22

Modifying the audio output assignments. 22

Mapping the audio content to the AES3 configuration. 23

Enabling Dolby Atmos. 23

Copyright © 2026 Christie Digital Systems USA, Inc. All rights reserved.
If printing, consider using recycled paper and recycle this document after use.

Disposing of the product packaging. 24
Managing IMB end-of-life. 24

Enhancements and licensing. 25
Identifying the Christie IMB electronic serial number. 25

Playing content. 26
Uploading KDMs from the web user interface. 26

Managing attached storage devices. 28
Connecting a IMB-S4 NAS device 28
Configuring the IMB-S4 NAS storage settings. 29
Viewing content on the IMB-S4 NAS. 29
Deleting IMB-S4 NAS content. 30

Supported formats. 31
Compatible cinema formats - 2D video. 31
Compatible cinema formats–3D video. 31
Supported audio formats. 32
AES3 port pin map. 33

Regulatory. 34
Safety. 34
Electro-magnetic compatibility. 34
Emissions. 34
Immunity. 34
Environmental. 34
Security policy. 35
Anti-tampering circuitry. 35

Copyright © 2026 Christie Digital Systems USA, Inc. All rights reserved.
If printing, consider using recycled paper and recycle this document after use.

Safety precautions

Learn about the safety precautions related to the Christie IMB.

General safety precautions

Read all safety and warning guidelines before installing or operating the product.

Hazard warnings also apply to accessories once they are installed in a Christie product connected to power.

Warning! If not avoided, the following could result in death or serious injury.

- SHOCK HAZARD! Disconnect the product from AC before installing, moving, servicing, cleaning, removing components, or opening any enclosure.
- EXPLOSION HAZARD! Allow sufficient time for the lamp to cool down before powering down the product, disconnecting it from AC, and opening the lamp door.
- EXPLOSION HAZARD! Replacement battery must be of the correct type.
- EXPLOSION HAZARD! Dispose of the battery according to local area regulations.

Caution! If not avoided, the following could result in minor or moderate injury.

- Only Christie qualified technicians are permitted to open product enclosures.
- Observe all electrostatic precautions. Use a grounded wrist strap and insulated tools when handling, servicing, or cleaning electronic assemblies.

Copyright © 2026 Christie Digital Systems USA, Inc. All rights reserved.
If printing, consider using recycled paper and recycle this document after use.

Introduction

This manual provides installation and setup instructions for the Christie IMB.

What's new in the guide?

The following updates have been made to the guide.

-06 updates:

- Added information to set the Linear Timecode (LTC) output to restart the timecode at the beginning of the clip in the *Christie IMB components* (on page 7) and Selecting Integrated Media Block (IMB) preferences topics.
- Added the *Synchronizing playback on multiple projectors* (on page 17) section in the *Installing and configuring* (on page 10) chapter.
- Added step 7 and a note to the *Playing content* (on page 26) topic.

-05 updates:

- Updated the Linear Timecode (LTC) output information in the *Christie IMB components* (on page 7) topic.
- Updated the *Best practices when installing an IMB* (on page 10) topic to add an updating the software best practice.
- Added the *Checking for the latest software version* (on page 21) topic.
- Added default NAS-S4 IP address information to the *Connecting a IMB-S4 NAS device* (on page 28) and *Configuring the IMB-S4 NAS storage settings* (on page 29) topics.

-04 updates:

- Renamed the Control IP field to the Command IP field in the *Enabling Dolby Atmos* (on page 23) topic.

Key features

Understand the important features of the Christie Integrated Media Block (IMB).

- On board solid state drive (SSD) storage
- Network attached storage (NAS) device support
- Can play content at up to 4K 96fps (4K 48fps per eye 3D)
- Long-life battery that does not require charging
- Easy integration with all Christie CineLife+ Series 4 projectors

Copyright © 2026 Christie Digital Systems USA, Inc. All rights reserved.
If printing, consider using recycled paper and recycle this document after use.

- Fully integrated with the projector web user interface (UI)

Christie IMB components

Learn about the components on the Christie IMB.

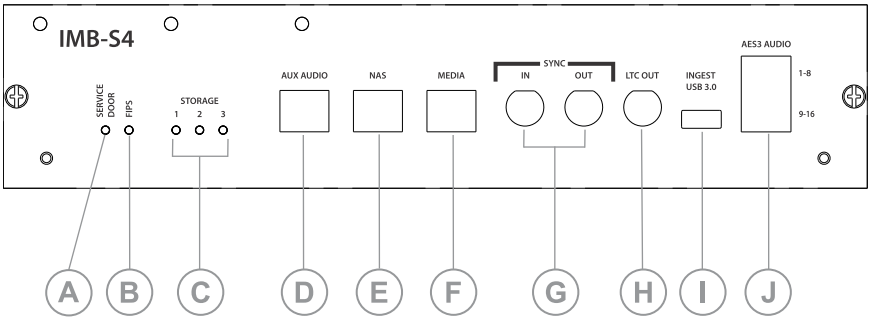

Feature	Description
A	Service door status indicator—Displays green when the security door is closed. Displays red if the security door is open. Playback will not commence or continue until this LED is green.
B	FIPS (Federal Information Processing Standards Publications) status indicator—Displays green when FIPS security status is operating correctly. If the LED is red, an error has occurred. Restart the IMB. If the LED remains red, return the product to Christie Digital Systems USA Inc.
C	Integrated Storage status indicator—Indicates the operational status of the integrated storage.
D	Auxiliary Audio port for immersive audio—Can be used to connect to IAB (immersive audio bitstream) to an Atmos cinema audio processor. 1GBase-T (RJ45 female).
E	Optional NAS storage interface—2.5GBase-T connection.
F	Content/Media network interface—2.5GBase-T connection to the Content/Media network (such as, TMS and LMS). Can also be used as a live streaming input port (RJ45 female).
G	Multi-projector playback Sync In and Sync Out (75 ohm BNC)—Provides a sync output signal (primary projector) or sync input signal (secondary projector). The sync signal can be daisy-chained for more than two projectors.
H	Linear Timecode (LTC) output for driving motion seat systems, for example, in accordance with SMPTE 12M, and SMPTE ST 12-1 specifications. By default, the LTC resets to zero at the beginning of each clip (CPL). To have the LTC output adhere to a show-based (SPL) timeline and not reset at the beginning of each clip, disable the **Set LTC output to restart timecode at the beginning of each clip** option. During clip transitions, the LTC output stops and then resumes at the beginning of the next clip (in case of a frame rate change). Higher frame rates timecodes are output over multiple frames (for example, frame rates greater than 24, 25, and 30 are output over multiple frame times) per SMPTE. Drop frame timecodes are not supported.
I	Data Interface for local ingest (USB-3 (4.8 Gbits/s) Type A)—The USB 3.0 port can be used to load content (DCP) or keys (KDM).
J	AES3 port for up to 16 channels of uncompressed digital audio output (2 x RJ45 female).

Copyright © 2026 Christie Digital Systems USA, Inc. All rights reserved.
If printing, consider using recycled paper and recycle this document after use.

Prerequisites

To install the Christie IMB into your theater environment, the following items are required.

- A Christie CineLife™ Series 4 projector with CineLife+™ 2.5.0 firmware or later installed. If you do not have CineLife+™ 2.1.0 firmware or later installed, install the IMB in the projector before running the firmware upgrade.
- An AES connector for dual RJ45 Ethernet ports, connecting your cinema audio processor to the Christie IMB audio output. See *AES3 port pin map* (on page 33).

IP and subnet considerations

To make sure the Christie IMB can operate, you must configure your network settings correctly. Incorrect subnet settings can cause communication issues between the Christie IMB and external automation devices.

To reduce the risk of communication issues:

- Assign the projector Management, IMB-S4 Aux Audio, IMB-S4 NAS, and IMB-S4 Media network networks to non-conflicting subnets. For example:

Netmask	255.255.255.0
Command and Control (Management)	192.168.3.100
Content/Media	192.168.2.1
IMB-S4 NAS	192.168.1.100
Aux Audio	192.168.3.1

- Configure the Content/Media port on the Christie IMB faceplate to use dynamic host configuration protocol (DHCP) when not in use. When you set DHCP on an Ethernet port and nothing is connected to the port, the Christie IMB does not mount the port and there is no risk of an IP address conflict.
- Use static IP addresses on the Command and Control (Management), Content/Media, IMB-S4 NAS, and Aux Audio ports when they are in use.

Related documentation

Additional information on this product is available in the following documents.

- *Christie IMB-S4 User Guide (P/N: 020-103873-XX)*
- *Servicing the IMB-S4 Instruction Sheet (P/N: 020-103880-XX)*

Accessing product documentation

For installation, user, and service information, see the product documentation available on the Christie Digital Systems USA Inc. website. Read all instructions before installing, using, or servicing this product.

1. Access the documentation from the Christie website:
    - Go to this URL: *https://bit.ly/3VHe6cI* or

Copyright © 2026 Christie Digital Systems USA, Inc. All rights reserved.
If printing, consider using recycled paper and recycle this document after use.

https://www.christiedigital.com/products/all-accessories/integrated-media-block/imb-s4/.

- Scan the QR code using a QR code reader app on a smartphone or tablet.

2. To access service information, sign into the Partner Portal.
3. On the product page, switch to the **Downloads** tab.

Viewing Christie University product training videos

Christie University provides select product training videos that are helpful for understanding and using your product.

To view the available videos for your product:

1. Go to Christie University: *https://training.christiedigital.com*.
2. Select **I'm a Christie partner or customer**.
3. Log into your profile.
4. Select **Catalog**.
5. Select **Videos**.
6. Select **Product Training Videos**.
7. Navigate to the folder for your product.

Technical support

Technical support for Christie Cinema products is available at:

- *Support.cinema@christiedigital.com*
- +1-877-334-4267

Copyright © 2026 Christie Digital Systems USA, Inc. All rights reserved.
If printing, consider using recycled paper and recycle this document after use.

Installing and configuring

Learn how to install and configure the Christie IMB-S4.

Site requirements

To safely install and operate the IMB, the installation location must meet these minimum requirements.

Physical operating environment

- Ambient temperature (operating) 10 to 35°C (50 to 95°F)
- Humidity (non-condensing) 10% to 80%
- Operating altitude 0 to 4000 meters (0 to 13,125 feet) at 10 to 21.9°C (50 to 71.4°F) ambient

Physical non-operating environment

- Storage temperature range -40 to 70°C (-40 to 158°F)

Best practices when installing an IMB

Christie recommends the following best practices when installing IMBs.

- Download and use the most recent version of the installation and setup guide for your IMB from the Christie website.
- Review all available courses on Christie University pertaining to your IMB model or safety information.
- Make sure the required tools are available.
- Let the IMB and its components acclimatize to the installation environment.
- Update CineLife+ and IMB software when new software updates are available.

  For details, see the *Christie IMB-S4 User Guide (P/N: 020-103873-XX)*.

Copyright © 2026 Christie Digital Systems USA, Inc. All rights reserved.
If printing, consider using recycled paper and recycle this document after use.

Connecting to a content network

With a content network, you can ingest content from a theater management system (TMS), a satellite receiver, or another IMB. The network file system (NFS) service must be enabled on the file share accessed by the Christie IMB.

To allow the projector to communicate with the ingest device, see the Ingesting content and keys topic in the *Christie IMB-S4 User Guide (P/N: 020-103873-XX)*. Specify the IP address of the theater management system or satellite receiver in the IP Address field and select the NFS share in the Share Folder list. For details, see *IP and subnet considerations* (on page 8).

Copyright © 2026 Christie Digital Systems USA, Inc. All rights reserved.
If printing, consider using recycled paper and recycle this document after use.

Content network topology

Learn the components of a content network.

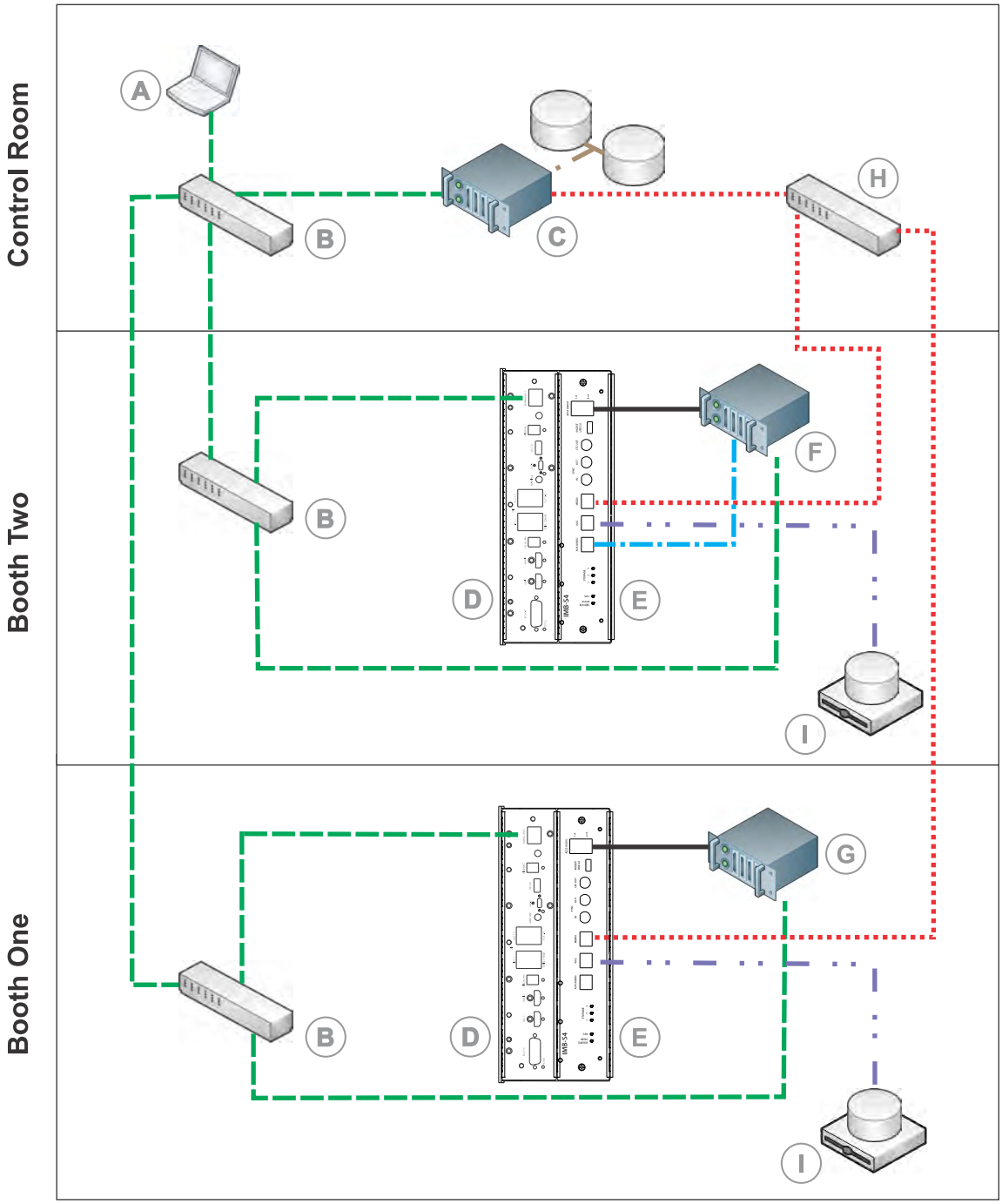

Item	Description
A	Control computer

Copyright © 2026 Christie Digital Systems USA, Inc. All rights reserved.
If printing, consider using recycled paper and recycle this document after use.

Item	Description
B	GigE switch for command and control network
C	Theater Management System (TMS) or Library Management System (LMS)
D	Common audio video electronics board (CAVE)
E	Christie Integrated Media Block (IMB)
F	Dolby Atmos Cinema processor
G	Digital Cinema sound processor
H	GigE switch for content network
I	IMB-S4 NAS
	Command and Control (Management) network (GigE media network for moving content over the network)
	Content/Media network (GigE)
	Direct connection to CP850
	Connection to the IMB-S4 NAS
	AES connection

LED status indicators

The following table provides the IMB-S4 status indicator LED and its meaning.

LED action	Description
Service door LED	
Green	Indicates the service door is closed.
Red	Indicates the service door is open.
FIPS LED	
Green	Indicates the FIPS is armed and is in approved operational mode.
Orange	Indicates a periodic self-test is in progress.
Red	Indicates the FIPS is in an error state.
Storage 1, 2, 3 LEDs	
Green	Indicates drive activity.
Red	Indicates a failure of the associated SSD.
Orange	Indicates the RAID is being rebuilt.
Auxiliary Audio (Ethernet) LEDs	
Yellow	Indicates a link.
Green	Indicates activity.

Copyright © 2026 Christie Digital Systems USA, Inc. All rights reserved.
If printing, consider using recycled paper and recycle this document after use.

LED action	Description
NAS (Ethernet) LEDs	
Yellow	Indicates a link.
Green	Indicates activity.
Content/Media (Ethernet) LEDs	
Yellow	Indicates a link.
Green	Indicates activity.

Installing the Christie IMB

The Christie IMB is installed in the card cage located on the side of the projector.

Marriage permissions are required to activate marriage.

Caution! If not avoided, the following could result in minor or moderate injury.

- Observe all electrostatic precautions. Use a grounded wrist strap and insulated tools when handling, servicing, or cleaning electronic assemblies.

To prevent damage by static electricity, keep the Christie IMB in its anti-static package until you install it.

1. Turn off the light source and cool the projector for at least 15 minutes.
2. Turn off the projector and disconnect it from AC power.
3. To access the marriage lock pin.
   - For CP44xx-RGB models, open the service door.
   - For all other models, remove the top cover.
4. Release the marriage ring.
   - For Cinema 2K-RBe models, pull the marriage plate lever.
   - For all other models, release the marriage lock pin.

   Marriage plate lever:

Copyright © 2026 Christie Digital Systems USA, Inc. All rights reserved.
If printing, consider using recycled paper and recycle this document after use.

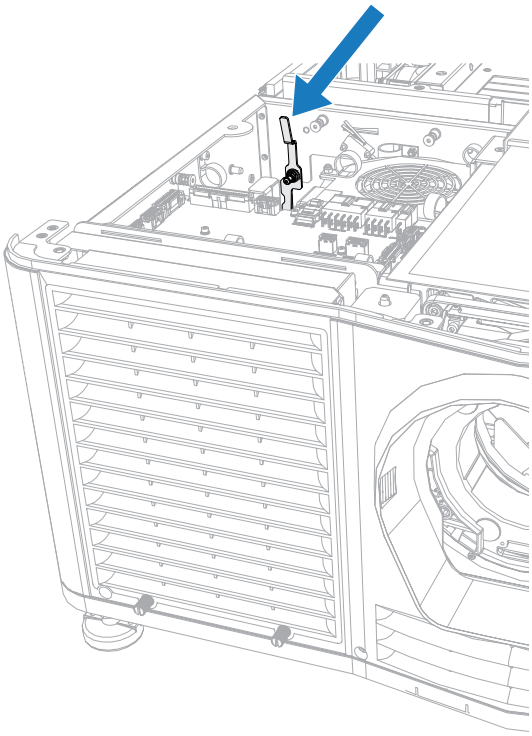

Marriage lock pin:

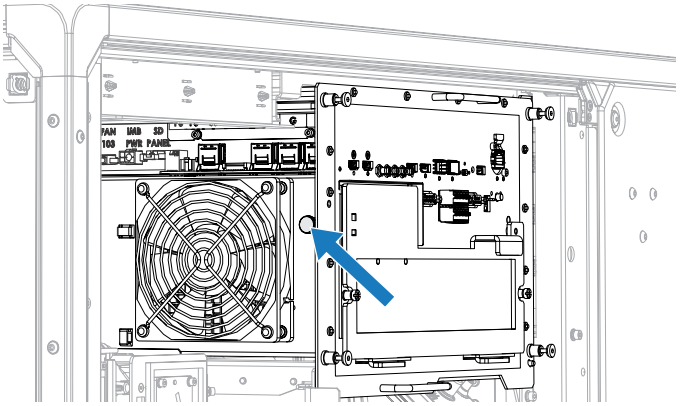

5. Remove the marriage ring.
6. Loosen the two screws securing the blank plate and remove it.

Copyright © 2026 Christie Digital Systems USA, Inc. All rights reserved.
If printing, consider using recycled paper and recycle this document after use.

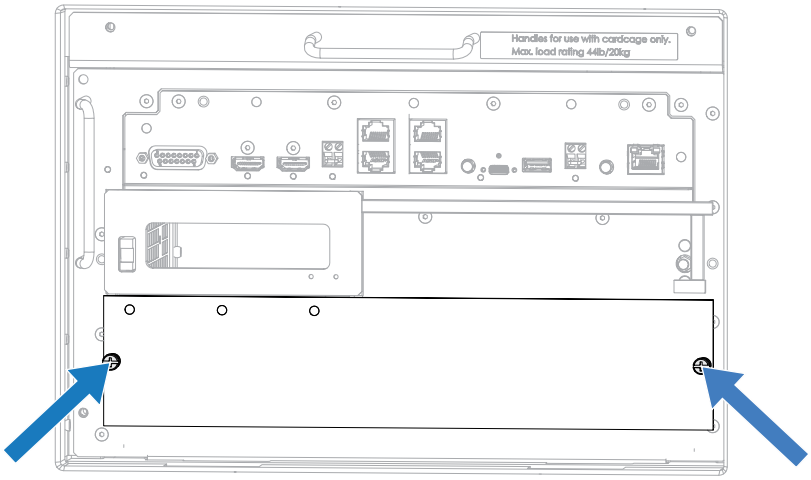

7. Unpack the Christie IMB-S4 and verify:
   - The holographic stickers covering the fasteners on the security enclosure are intact.
   - No obvious signs of tampering on the security enclosure exist.
   - The serial number stickers are in place and legible.

   If the Christie IMB shows signs of tampering, contact Christie support. For contact information for your region, see the back cover of this document.
8. Align the Christie IMB with the guides in the card cage and then slide it partially into the projector.
9. Connect the power (A) and HFR Connect (D) harnesses to the power (B) and COM (C) connectors on the card cage.

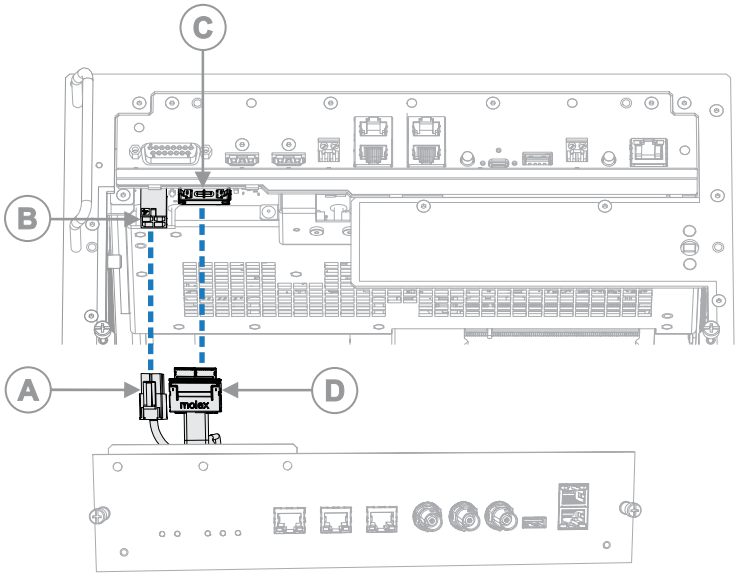

10. Fully slide the IMB into the projector.
11. Tighten the two screws securing the IMB.

Copyright © 2026 Christie Digital Systems USA, Inc. All rights reserved.
If printing, consider using recycled paper and recycle this document after use.

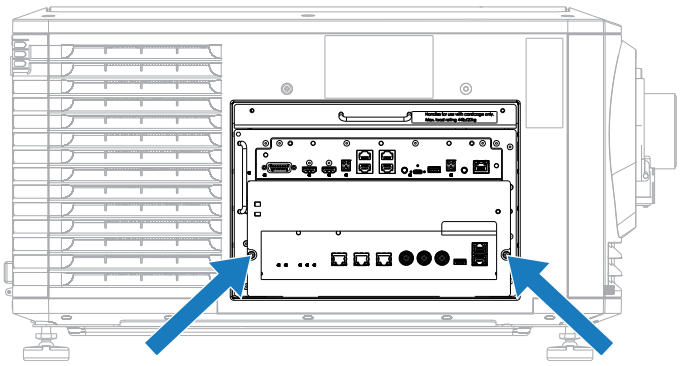

12. Replace the marriage ring.
13. Close the service door or replace the top cover.
14. Turn on the projector.
15. Activate marriage.

Synchronizing playback on multiple projectors

Multiple projector playback is supported using the IMB-S4 and CineLife+ software.

When synchronizing playback on multiple projectors, note the following about the multiple projector feature:

- Content loaded in the playback drawer on the primary projector IMB is loaded on the secondary projector IMBs.
- The playback of video on all systems is in sync with each other.
- Audio and video are in sync throughout the playback and remain in sync when pausing, jogging, or skipping playback content.
- Audio is only provided on the primary projector.
- Pause, jog, cue, stop, and play content using the primary projector playback bar or API commands.
- Playback of both 2D and 3D content is supported.
- All multiple projector settings are backed up and restored as part of the existing backup and restore process.
- A factory reset disables Multiple Projector mode and returns any settings to the default setting.

Configuring a multiple projector setup workflow

Follow these steps to configure a multiple projector setup.

1. *Connect the primary and secondary projectors' to the network* (on page 19).
2. *Set up the primary projector and enable it* (on page 19).
3. *Set up the secondary projector(s)* (on page 20).

Copyright © 2026 Christie Digital Systems USA, Inc. All rights reserved.
If printing, consider using recycled paper and recycle this document after use.

Multiple projector system topology

The following image shows a multiple projector example system using four projectors:

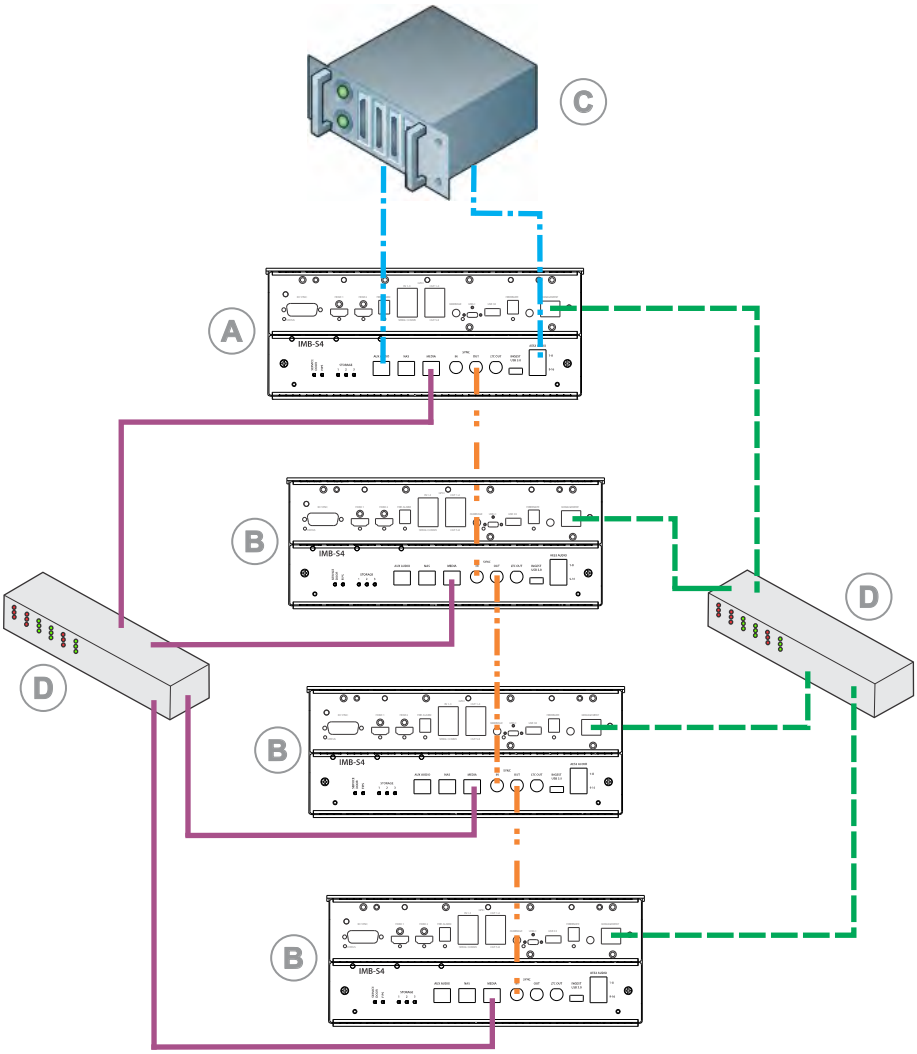

Item	Description
A	Primary projector
B	Secondary projector
C	Audio processor
D	Ethernet swtich
	Management Network (2.5GigE) For all projectors, the Management Ethernet connection must be on the same network and subnet so the primary projector can configure, control, and set up content on the secondary projectors using the network.
	During multi-projector playback, the source of both discrete AES audio and Dolby Atmos is provided by the IMB-S4 in the primary projector.

Copyright © 2026 Christie Digital Systems USA, Inc. All rights reserved.
If printing, consider using recycled paper and recycle this document after use.

Item	Description
	Represents a coax cable for multi-projector playback Sync In and Sync Out In a multiple projector setup, the SYNC Out of the IMB-S4 in the projector designated as the primary projector must be connected to the SYNC In of the IMB-S4 of the secondary projector. When more than one secondary projector is used, the SYNC Out of the secondary connects to the SYNC In of the next secondary projector, and so on. See also, row G in the *Content network topology* (on page 12) topic.
	Content/Media network (2.5GigE) Required when using *content replication* (on page 20).

Connecting the hardware

The following multiple projector actions are done over the projector Management port:

- Distribution of playlists from the primary projector to the secondary projectors.
- Distribution of key delivery messages (KDMs) from the primary projector to the secondary projectors.
- All real-time playback controls and synchronization (handled over the coax cable for Sync In and Sync Out).

Follow these steps to connect the hardware for a multiple projector setup:

1. Connect the primary projector Management Ethernet port to a network.
2. Connect one or more secondary projectors Management ports to the same network as the primary projector.

   The primary and second projectors must be on the same network and subnet.
3. If using content replication, connect all IMB-S4 Media ports to the Media network.

Configuring the primary projector

Learn how to configure the primary projector in a multiple projector setup.

1. *Log into the projector* (on page 20).
2. In the left navigation menu, select **Service Setup** > **Multi-Projector Setup**.
3. To set the projector as the primary projector, toggle the **Multi-Projector Control** switch to enabled.
4. If content replication is required, toggle the **Content Replication** switch to enabled.

   For details on content replication, see *Understanding content replication* (on page 20).
5. Set the primary projector eye selection for 3D applications.
   - Left/Right (Default)—Used for active 3D glasses or 2D applications
   - Left
   - Right
6. Once the primary projector is configured, *set up secondary projector(s)* (on page 20).

Copyright © 2026 Christie Digital Systems USA, Inc. All rights reserved.
If printing, consider using recycled paper and recycle this document after use.

Understanding content replication

When content replication is enabled, all ingested content on the primary projector is automatically synced to all secondary projectors.

There are methods to ingest content on multiple projectors:

- Manually add content for multiple projector playback on each projector individually.

  The content must have the same file name and assets across all the projectors. If the Content Replication toggle switch is disabled, the user must make sure the same content is ingested across all projectors.
- Automatically ingest content automatically to the secondary projectors from the primary projector using the Content Replication feature.

When the Content Replication feature is enabled, note the following:

- Content is only be replicated on secondary projectors that are online.
- When new content is ingested on the primary projector, it is added to all secondary projectors.
- Content is only be replicated between storage designated as primary content drives.
- The primary storage between all projectors must match, for example, onboard storage must have the same size solid state drives (SSDs) or all NAS devices must have the same size drives.
- During the content replication process, an In Progress notification is displayed in the Primary Projector panel and cleared when the content replication is complete.
- Content replication does not delete content from the secondary projectors. Content must be manually deleted from each secondary projector.

Configuring the secondary projector(s)

Learn how to configure the secondary projector(s) in a multiple projector setup.

1. In the left navigation menu, select **Service Setup** > **Multi-Projector Setup**.
2. *Make sure the primary projector is set up* (on page 19).
3. Select **+ New Secondary Projector**.
4. In the New Secondary Projector dialog, either manually enter the IP address of the projector or select the projector from the list of available projectors.
5. Select **Add**.
6. Set the secondary projector eye selection for 3D applications.
   - Left/Right—Used for active 3D glasses or 2D applications
   - Left (Default)
   - Right
7. To add additional secondary projectors, repeat steps 3 to 6.
8. To enable the secondary projectors, toggle the **Enable** switch.

Logging into the projector

Log into the projector to access projector menus.

1. From the login page, in the User list, select a username.

Copyright © 2026 Christie Digital Systems USA, Inc. All rights reserved.
If printing, consider using recycled paper and recycle this document after use.

2. Enter your password.
3. Select **Login**.

Selecting Integrated Media Block (IMB) preferences

Choose from the available options to set the type of Integrated Media Block (IMB).

1. In the left navigation menu, select **Service Setup** > **Preferences**.
2. Select **IMB**.
3. In the Type list, select the **Christie IMB** for the IMB-S4.
4. For the IMB to power on when the projector is in Standby mode, enable the **IMB Powered in Standby** slider.

   Enable the **IMB Powered in Standby** option if content ingest should be done in off hours (when projector is in Standby mode) or disabled when power savings is a higher priority and content ingest is only done when the projector is in Power On mode
5. To determine the homepage content when logging in, select **Upcoming Events** if using the IMB-S4 scheduler or **Status** to see the projector status instead.
6. Enable or disable the **Enable IMB FTP Server Access using Projector Management port** option as required.

   When enabled, the projector FTP server is accessible using the TCP port 2121 and the IMB FTP server is accessible using the TCP port 21. Christie recommends not performing an ingest while playback is underway.
7. To enable the Linear Timecode (LTC) output to adhere to the clip-based timeline and not the show playlist (SPL) timeline, enable the **Set LTC output to restart timecode at the beginning of each clip** option.

   A factory reset, disables this setting so the LTC adheres to the SPL timeline.
8. When the system prompts you to reboot the projector, select **Reboot**.
9. After the projector has restarted, log in with your user account.

Checking for the latest software version

Note the version of the CineLife+ and IMB software and check the Christie website to see if newer versions of the software have been released. If newer versions have been released, upgrade the software. For details on updating the software, see the *Christie IMB-S4 User Guide (P/N: 020-103873-XX)*.

Keeping the CineLife+ and IMB updated with the latest software versions ensures access to the latest features and optimal performance abilities.

Copyright © 2026 Christie Digital Systems USA, Inc. All rights reserved.
If printing, consider using recycled paper and recycle this document after use.

Activating marriage

After selecting the Integrated Media Block (IMB) type, you must install the IMB and complete marriage to display secure content and to comply with the Digital Cinema Initiatives (DCI) specification. You cannot complete marriage remotely.

You cannot complete marriage remotely because you must select the **Marriage** button on the input panel during the marriage process.

1. Verify the marriage ring is installed correctly and an anti-tamper alarm does not appear on the touch panel.
2. In the left navigation menu, select **Service Setup** > **Marriage Setup**.
3. Select **Start** and complete the Marriage Setup wizard.

   At the Arming stage, enter the Marriage password.
4. Select **Finish**.
5. To complete the process, on the projector select the **Marriage** button.

Configuring audio settings

Connect the digital cinema audio processor to the Christie IMB and configure the audio settings.

1. Connect the two audio cables to the Christie IMB AES3 port and the other ends to a digital cinema audio processor.
2. If required, *modify the audio output assignments* (on page 22).

   The audio output assignments are predefined according to the standards. If the AES3 channels are wired in a standard configuration, you can leave the settings at the defaults.
3. *Configure the media and audio tracks* (on page 23) extracted from the DCP package or audio channels from the HDMI inputs on the card cage.

Modifying the audio output assignments

The audio output assignments are predefined according to the standards. If the AES3 channels are wired in a standard configuration, you can leave the settings at the defaults; otherwise, you can assign the audio content to different AES3 channels.

1. In the left navigation menu, select **Service Setup** > **Audio Setup**.
2. Switch to the **Audio Output Assignment** tab.
3. If required to change a content assignment for an audio output channel, from the Content Assignment list, select the appropriate option.
4. To test the audio output assignment for a particular audio output channel, select the **Test Enable** slider.

   A test tone sounds on the respective audio output channel.

   Enabling another test, disables the current one.

Copyright © 2026 Christie Digital Systems USA, Inc. All rights reserved.
If printing, consider using recycled paper and recycle this document after use.

Mapping the audio content to the AES3 configuration

Configure the mapping of the media and audio tracks extracted from the DCP package or audio channels from the HDMI inputs on the card cage.

The HDMI audio source must be configured to output pulse code modulation (PCM) audio at all times.

1. In the left navigation menu, select **Service Setup** > **Audio Setup**.
2. Switch to the **Channel Mapping** tab.
3. From the Channel Format list, select the appropriate format:
   - Interop
   - SMPTE Wild Track Format
   - HDMI

   For HDMI audio, up to eight channels can be mapped. Any unused audio output channels are muted.
4. If required to change the media audio channel from the defaults for the AES3 audio output channel and associated channel, from the Media Audio Channel list, select the appropriate option.

   The Media Audio Channel list provides only the selection based on the selected Channel Format. For example, when the SMPTE Wild Track Format is selected, the Media Audio Channel list shows CH01 through CH16.
5. To reset the media audio channel settings to the defaults for the channel format, select **Reset to Default**.
6. At the confirmation prompt, select **Reset**.

Enabling Dolby Atmos

Complete the following procedure to enable Dolby Atmos audio settings.

This procedure is for IMB audio only and not for HDMI audio coming from the HDMI input on the Common audio video electronics board (CAVE).

1. Connect the Dolby Atmos cinema audio processor to the Auxialiary Audio port.
2. Verify the IP address for the Dolby Atmos cinema audio processor is set on the IMB.

   For details, see *IP and subnet considerations* (on page 8).
3. In the left navigation menu, select **Service Setup** > **Audio Setup**.
4. Switch to the **Dolby Atmos Configuration** tab.
5. Enable the **Dolby Atmos** slider.

   The color of the slider changes to blue to indicate it is active.
6. In the Command IP field, enter the IP address of the control module.
7. In the Input IP field, enter the secure IP address of the input module.
8. To test Dolby Atmos connectivity, select **Test Connection**.
9. Select **Save**.

Copyright © 2026 Christie Digital Systems USA, Inc. All rights reserved.
If printing, consider using recycled paper and recycle this document after use.

Disposing of the product packaging

Once the product has been installed and set up, Christie recommends reusing or recycling the product packaging according to your local regulations.

Managing IMB end-of-life

As per FIPS140-3, make sure all components of the IMB are disposed of properly according to local regulations and laws.

Warning! If not avoided, the following could result in death or serious injury.

- EXPLOSION HAZARD! Dispose of the battery according to local area regulations.

Notice. If not avoided, the following could result in property damage.

- Do not remove both batteries at the same time. If you remove both, you tamper it, your keys are erased, and you must replace the IMB. Failure to follow these steps results in permanent failure of the IMB.

1. Remove both battery boards from the IMB.

   This causes tampering and zeroization of the IMB module.
2. Dispose of the board properly according to local e-waste regulations and laws.
3. Dispose of the batteries, which contain lithium, properly according to local regulations and laws.

Copyright © 2026 Christie Digital Systems USA, Inc. All rights reserved.
If printing, consider using recycled paper and recycle this document after use.

Enhancements and licensing

Learn about importing licenses and activating product enhancements.

Identifying the Christie IMB electronic serial number

The Christie IMB electronic serial number (ESN) allows a distributor to identify the IMB certificate and generate the key delivery message (KDM) key to play encrypted content.

On Christie IMB-S4, the ESN is printed on the front of the faceplate.

1. To display the 12-digit hexadecimal ESN on the projector touch panel, select **About**.
2. Review the displayed IMB SM ESN number.
3. To download the SM certificate to send to distributors, follow these steps:
   a) In the left navigation menu, select **About**.
   b) From the certificate list, select **SM Certificate (used by distributors to generate KDM keys)**.
   c) Select **Download**.
   d) In the Name field, enter a name for the certificate file.
   e) Select **Accept**.

Copyright © 2026 Christie Digital Systems USA, Inc. All rights reserved.
If printing, consider using recycled paper and recycle this document after use.

Playing content

After installing and configuring the Christie IMB, complete the following tasks to play content.

For more detailed instructions, see the *Christie IMB-S4 User Guide (P/N: 020-103873-XX)*.

1. Ingest the content.

   Content is typically provided on a hard drive sent by your movie distributor.

2. *Ingest the key delivery message (KDM) key* (on page 26).

   A KDM key is not required for trailers and other unencrypted content. The KDM key is typically sent separately from the encrypted content on a USB flash drive.

3. Verify the content plays correctly and the KDM is correct.
4. Create a playlist.

   A playlist is a list of content files (located on the on-board storage or a network attached server (NAS) device) including trailers, features, and automated events that play in an order you define.

5. Verify the playlist plays correctly.
6. Optionally, schedule playback or add automation to a playlist.
7. Load and play content.

   The scheduled content is loaded five minutes before the playtime and you are prevented from loading any other content for playback unless scheduler is disabled.

   Missing features or missing or bad encrypted content prevent the playlist from loading. All other missing content (such as trailers, advertisements, and so on) do not prevent content from loading.

Uploading KDMs from the web user interface

Use this procedure to upload key delivery messages (KDMs) from the web user interface.

A KDM key is not required for trailers and other unencrypted content. The KDM key is typically sent separately from the encrypted content on a USB flash drive or an email message.

1. Receive an xml (for a single KDM) or zip (for one or more KDMs) file from the movie distributor.
2. *Log into the projector web user interface* (on page 20).
3. In the left navigation menu, select **Content Manager** > **Keys** > **Import KDM**.
4. In the Open dialog, navigate to the folder where the file is located.
5. Select one or more xml or zip files.
6. Select **Open**.
7. Monitor the progress on the Progress tab and the toast messages to see what keys are stored or rejected.

Copyright © 2026 Christie Digital Systems USA, Inc. All rights reserved.
If printing, consider using recycled paper and recycle this document after use.

If KDMs are selected for uploading that are not targetted at the current IMB-S4, the IMB-S4 rejects the KDMs and the user interface generates an error toast message for each rejected KDM.

Copyright © 2026 Christie Digital Systems USA, Inc. All rights reserved.
If printing, consider using recycled paper and recycle this document after use.

Managing attached storage devices

A network attached storage (NAS) device can be attached to the IMB that can store, manage, and playback conent like what can be done with the built-in onboard storage (OBS) of the IMB.

Only one IMB-S4 NAS can be connected to the IMB NAS Ethernet port (using a direct connection or a switch) and only one IMB can use the IMB-S4 device as content storage at a time.

Connecting a IMB-S4 NAS device

The IMB-S4 network attached storage (NAS) device must be configured to use the network file system (NFS) protocol. Christie recommends using a static IP address for the NAS device.

1. Verify the IMB-S4 NAS device is connected to the gigabit Ethernet port labeled NAS on the main projector communication board.
2. Verify the IP address for the IMB-S4 NAS is set on the IMB.

   For details, see *IP and subnet considerations* (on page 8).
3. In the left navigation menu, select **Service Setup** > **Storage Device Setup**.
4. Select **+ New Storage Device**.
5. In the New Device dialog, complete these fields:
   - Name—The name of the storage device
   - IP Address—The IP address of the storage device

     The default IP address for the NAS-S4 is 192.168.1.101. Make sure the IMB-S4 NAS IP address is set to an IP address compatible with that subnet, for example 192.168.1.10.
   - Device—The type of device, which can be one of two options: Content Playback Source & Ingest Destination device (Default) or an NFS Ingest Source

   If the IMB-S4 NAS is configured as an NFS Ingest Source, it cannot be configured as the primary storage drive.
6. Select **Add**.

   The IMB-S4 NAS device is added and the IMB-S4 NAS setting information is displayed.
7. To make the content drive the primary storage drive, select the **Set as Primary Drive** slider.

   By default, the IMB onboard storage is the primary storage.

   Once a primary storage device has been configured, it is automatically mounted during power up if this device is available. However, if the primary storage device is disconnected or is not available, the projector continues to try to mount the device until it becomes available.

   After saving, a green dot and the text *Primary Drive* indicate the IMB-S4 NAS is active.
8. To test the connection to the storage device, select **Test Connection**.
9. Select **Save**.

Copyright © 2026 Christie Digital Systems USA, Inc. All rights reserved.
If printing, consider using recycled paper and recycle this document after use.

Configuring the IMB-S4 NAS storage settings

Learn how to configure the IMB-S4 network attached storage (NAS) device settings.

1. In the left navigation menu, select **Service Setup** > **Storage Device Setup**.
2. Select an IMB-S4 NAS from the list.
3. To make the content drive the primary storage drive, select the **Set as Primary Drive** slider.

   By default, the IMB onboard storage is the primary storage.

   Once a primary storage device has been configured, it is automatically mounted during power up if this device is available. However, if the primary storage device is disconnected or is not available, the projector continues to try to mount the device until it becomes available.

   After saving, a green dot and the text *Primary Drive* indicate the IMB-S4 NAS is active.
4. Update these fields as required:
   - Name—The name of the storage device
   - IP Address—The IP address of the storage device

     The default IP address for the NAS-S4 is 192.168.1.101. Make sure the IMB-S4 NAS IP address is set to an IP address compatible with that subnet, for example 192.168.1.10.
   - Username—User name for the NAS device
   - Password—Password for the NAS device
   - Share Folder—Folder where to ingest content from
   - Device—The type of device, which can be one of two options: Content Playback Source & Ingest Destination device (Default) or an NFS Ingest Source

   If the IMB-S4 NAS is configured as an NFS Ingest Source, it cannot be configured as the primary storage drive.
5. To test connectivity, select **Test Connection**.
6. Select **Save**.

Viewing content on the IMB-S4 NAS

When an IMB-S4 network attached storage (NAS) device is connected to the projection system as a Content Playback Source & Ingest Destination device, the IMB-S4 NAS content is viewable on the Local Content page of the Content Manager menu.

1. In the left navigation menu, select **Content Manager**.
2. To view the content of the IMB-S4 NAS, from the storage capacity list, select the IMB-S4 NAS.

   The used/free disk space along with the device name is displayed in the Local Content list. The background color changes based on available capacity:
   - Blue—No warnings
   - Amber—Capacity is < 250 GB.
   - Red—Capacity is < 25 GB (full).
3. To sort the content on the IMB-S4 NAS, from the Show list, select the type of content you want to view.

Copyright © 2026 Christie Digital Systems USA, Inc. All rights reserved.
If printing, consider using recycled paper and recycle this document after use.

Deleting IMB-S4 NAS content

When an IMB-S4 network attached storage (NAS) device is connected to the projection system as a Content Playback Source & Ingest Destination device, you can delete content on the IMB-S4 NAS.

1. In the left navigation menu, select **Content Manager**.
2. Select the IMB-S4 NAS content from the list you want to delete.
3. Select **Delete**.
4. At the confirmation prompt, select **Delete**.

Copyright © 2026 Christie Digital Systems USA, Inc. All rights reserved.
If printing, consider using recycled paper and recycle this document after use.

Supported formats

Learn about the formats IMB supports.

Compatible cinema formats - 2D video

The Christie IMB supports a maximum bandwidth of 1000 Mbps for 2D Cinema content. JPEG content must be contained in an Interop or Society of Motion Picture and Television Engineers (SMPTE) Digital Cinema Package (DCP).

Specification	Resolution	Frame rate	Bit depth	Color format
SMPTE 428-1-2006	2048x1080	24.0	12-bits	X'Y'Z' (4:4:4)
SMPTE 428-11-2009	2048x1080	25.0	12-bits	X'Y'Z' (4:4:4)
SMPTE 428-11-2009	2048x1080	30.0	12-bits	X'Y'Z' (4:4:4)
SMPTE 428-11-2009	2048x1080	48.0	12-bits	X'Y'Z' (4:4:4)
SMPTE 428-11-2009	2048x1080	50.0	12-bits	X'Y'Z' (4:4:4)
SMPTE 428-11-2009	2048x1080	60.0	12-bits	X'Y'Z' (4:4:4)
SMPTE 428-11-2009	2048x1080	96.0	12-bits	X'Y'Z' (4:4:4)
SMPTE 428-11-2009	2048x1080	100.0	12-bits	X'Y'Z' (4:4:4)
SMPTE 428-11-2009	2048x1080	120.0	12-bits	X'Y'Z' (4:4:4)
SMPTE 428-1-2006	4096x2160	24.0	12-bits	X'Y'Z' (4:4:4)
SMPTE 428-11-2009	4096x2160	25.0	12-bits	X'Y'Z' (4:4:4)
SMPTE 428-11-2009	4096x2160	30.0	12-bits	X'Y'Z' (4:4:4)
SMPTE 2048-1-2011	4096x2160	48.0	12-bits	X'Y'Z' (4:4:4)
SMPTE 2048-1-2011	4096x2160	50.0	12-bits	X'Y'Z' (4:4:4)
SMPTE 2048-1-2011	4096x2160	60.0	12-bits	X'Y'Z' (4:4:4)*
SMPTE 2048-1-am1-2016	4096x2160	96.0	12-bits	X'Y'Z' (4:4:4)*

* These image formats may be supported at lower bit rate/sampling rate.

Compatible cinema formats–3D video

IMB supports single projector 3D. JPEG content must be contained in an Interop or Society of Motion Picture and Television Engineers (SMPTE) Digital Cinema Package (DCP).

Specification	Resolution	Frame rate (per eye)	Bit depth	Color format
SMPTE 428-1-2006	2048x1080	24.0	12-bits	X'Y'Z' (4:4:4)

Copyright © 2026 Christie Digital Systems USA, Inc. All rights reserved.
If printing, consider using recycled paper and recycle this document after use.

Specification	Resolution	Frame rate (per eye)	Bit depth	Color format
SMPTE 428-11-2009	2048x1080	25.0	12-bits	X'Y'Z' (4:4:4)
SMPTE 428-11-2009	2048x1080	30.0	12-bits	X'Y'Z' (4:4:4)
SMPTE 428-11-2009	2048x1080	48.0	12-bits	X'Y'Z' (4:4:4)
SMPTE 428-11-2009	2048x1080	50.0	12-bits	X'Y'Z' (4:4:4)
SMPTE 428-11-2009	2048x1080	60.0	12-bits	X'Y'Z' (4:4:4)
SMPTE 428-1-2006	4096x2160	24.0	12-bits	X'Y'Z' (4:4:4)
SMPTE 428-11-2009	4096x2160	25.0	12-bits	X'Y'Z' (4:4:4)
SMPTE 428-11-2009	4096x2160	30.0	12-bits	X'Y'Z' (4:4:4)
SMPTE 2048-1-2011	4096x2160	48.0	12-bits	X'Y'Z' (4:4:4)

Supported audio formats

The Christie IMB supports 16 audio channels over 8 AES3 digital audio output pairs on two RJ45 connectors.

- The HDMI audio source must be configured to output pulse code modulation (PCM) audio at all times.
- For HDMI sources, the Christie IMB supports up to eight channels of PCM audio over four AES3 digital audio output pairs.

RJ45 pin	Signal name	Audio channel
Top 1	AES1+	1
Top 2	AES1-	2
Top 3	AES2+	3
Top 4	AES3+	5
Top 5	AES3-	6
Top 6	AES2-	4
Top 7	AES4+	7
Top 8	AES4-	8
Bottom 1	AES5+	9
Bottom 2	AES5-	10
Bottom 3	AES6+	11
Bottom 4	AES7+	13
Bottom 5	AES7-	14
Bottom 6	AES6-	12
Bottom 7	AES8+	15

Copyright © 2026 Christie Digital Systems USA, Inc. All rights reserved.
If printing, consider using recycled paper and recycle this document after use.

RJ45 pin	Signal name	Audio channel
Bottom 8	AES8-	16

AES3 port pin map

This table provides pin mapping for the AES3 port:

PIN	Signal name
Top 1	AES Ch 1
Top 2	AES Ch 2
Top 3	AES Ch 3
Top 4	AES Ch 4
Top 5	AES Ch 5
Top 6	AES Ch 6
Top 7	AES Ch 7
Top 8	AES Ch 8
Bottom 1	AES Ch 9
Bottom 2	AES Ch 10
Bottom 3	AES Ch 11
Bottom 4	AES Ch 12
Bottom 5	AES Ch 13
Bottom 6	AES Ch 14
Bottom 7	AES Ch 15
Bottom 8	AES Ch 16

Copyright © 2026 Christie Digital Systems USA, Inc. All rights reserved.
If printing, consider using recycled paper and recycle this document after use.

Regulatory

This product conforms to the latest regulations and standards related to product safety, environmental, and electromagnetic compatibility (EMC) requirements.

Safety

- IEC 62368-1:2018 - Audio/Video, Information And Communication Technology Equipment - Part 1: Safety Requirements
- BS EN 62368-1:2014 - Audio/Video, Information And Communication Technology Equipment - Part 1: Safety Requirements
- UL 62368-1:2018 - Audio/Video, Information And Communication Technology Equipment - Part 1: Safety Requirements
- CSA CAN/CSA-22.2 No. 62368-1:2018 - Audio/Video, Information And Communication Technology Equipment - Part 1: Safety Requirements

Electro-magnetic compatibility

Emissions

- FCC CFR47, Part 15, Subpart B, Class A – Unintentional Radiators
- CAN ICES-003 (A)/NMB-003 (A) – Information Technology Equipment (Including Digital Apparatus) – Limits and Methods of Measurement
- CISPR 32/EN 55032, Class A – Electromagnetic Compatibility of Multimedia Equipment – Emission Requirements
- IEC 61000-3-2/EN61000-3-2 - Limits for Harmonic Current Emissions
- IEC 61000-3-3/EN 61000-3-3: Limitations of Voltage Changes, Voltage Fluctuations, and Flicker input current ≤ 16 A per phase and not subject to conditional connection

Immunity

- CISPR 35/EN 55035 Electromagnetic compatibility of multimedia equipment - Immunity requirements

Environmental

- EU Directive (2011/65/EU) on the restriction of the uses of certain hazardous substances (RoHS) in electrical and electronic equipment and the applicable official amendment(s).

Copyright © 2026 Christie Digital Systems USA, Inc. All rights reserved.
If printing, consider using recycled paper and recycle this document after use.

- EU Directive (2012/19/EU) on waste and electrical and electronic equipment (WEEE) and the applicable official amendment(s).
- Regulation (EC) No. 1907/2006 on the registration, evaluation, authorization and restriction of chemicals (REACH) and the applicable official amendment(s).
- China Ministry of Information Industry (along with 7 other Government Agencies) Order No.32 (01/2016) on the control of pollution caused by electronic information products, hazardous substances concentration limits (GB/T 26572 - 2011), and the applicable product marking requirement (SJ/T 11364 - 2014).

International packaging recycling mark requirements.

- EU Directive (2012/19/EU) on waste and electrical and electronic equipment (WEEE) and the applicable official amendment(s).
- EU Directive (94/62/EC) on packaging and packaging waste
- China packaging recycling mark standard (GB18455-2001)

Security policy

In accordance with the requirements of Federal Information Processing Standard (FIPS) 140-3, a security policy has been defined and published for the Christie Integrated Media Block (IMB).

This security policy identifies the ports and interfaces available on the device, the roles and services provided, and the critical security parameters protected by the Christie IMB. All users of the Christie IMB must abide by the requirements defined by the Christie IMB security policy. The Christie IMB security policy is available on the National Institute of Standards and Technology (NIST) website

Anti-tampering circuitry

The Christie Integrated Media Block (IMB) includes a security module that meets the Federal Information Processing Standard (FIPS) 140-3 security requirements as defined by the DCI Digital Cinema System Specification.

An important component of the security module is active anti-tamper monitoring. Any attempt to access the area under the security enclosure on the Christie IMB activates the anti-tamper circuitry and causes the FIPS LED to turn red. In addition, you cannot decrypt or play digital cinema content. If the anti-tamper circuitry is activated, you must return the Christie IMB to Christie Digital Systems USA Inc.

If you mishandle or drop the Christie IMB, you can activate the anti-tamper circuitry. Keep the Christie IMB in its original packaging until you install it.

Long-life batteries keep anti-tamper monitoring active when the Christie IMB is removed from the projector.

If the Christie IMB is exposed to constant temperature fluctuations, the lifetime of the battery can be shortened. The recommended temperature range for storing the Christie IMB is -20 to 25°C (-4 to 77°F).

Copyright © 2026 Christie Digital Systems USA, Inc. All rights reserved.
If printing, consider using recycled paper and recycle this document after use.